Developments in Theoretical Geomechanics, Smith & Carter (eds) © 2000 Balkema, Rotterdam, ISBN 90 5809 158 9

Complex variable analysis of Mindlin's tunnel problem

Arnold Verruijt
Delft University of Technology, Delft, Netherlands

John R. Booker
Sydney University, Sydney NSW, Australia

Keywords: complex variables, elasticity, tunneling

ABSTRACT: In this paper the stresses and deformations in an elastic half plane with a circular cavity are considered. The stresses are generated by uniform gravity of the material. The problem was solved by Mindlin [1940], using a system of bipolar coordinates. Mindlin's method, with a system of curvilinear coordinates, can be considered to be an early form of the application of a conformal transformation, and this suggests that the complex variable method, developed by Muskhelishvili [1953] may provide a more general approach to this problem. That this is indeed the case will be demonstrated in this paper. Because of the availability of modern computers this enables to correct a (small) number of numerical inaccuracies. The complex variable method enables to also evaluate the displacements, which were not included in Mindlin's original solution.

1 INTRODUCTION

The complex variable method for the solution of plane elastostatic problems was developed during and after the second world war, mainly by the Russian mathematician Muskhelishvili (1953). The method was found to be very effective for simply connected regions that can be mapped conformally onto a circle or a half plane (Muskhelishvili 1953, Sokolnikoff 1956, Timoshenko & Goodier 1970). For multiply connected regions the method has been used successfully for problems involving holes in infinite plates, but for the more general type of problems involving two finite boundaries, such as the type of problem considered here, the method was originally found to "present difficulties" (Sokolnikoff 1956, p. 301), and it was suggested to use the method using bipolar coordinates instead. This method has indeed been used with considerable success for a number of problems for regions bounded by two circles (Jeffery 1920, Mindlin 1940, 1948), especially for problems of an elastic half plane with a circular cavity, but this method only gives the stresses, and not the displacements, and the computations are rather complex.

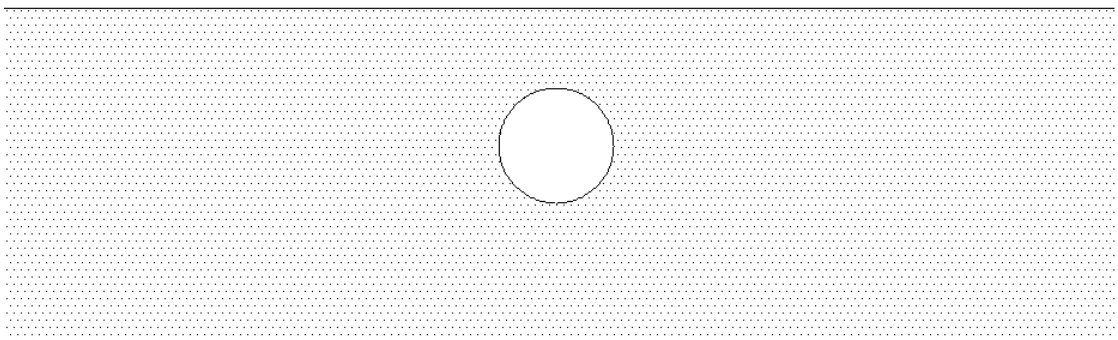

Figure 1. Half plane with circular cavity.

More recent work on the determination of stress concentration factors near cavities often uses other approximate analytical or numerical techniques, such as singular asymptotic analysis (Callias & Markenscoff 1989), numerical integration of integral transform solutions (Georgiadis et al. 1995) or boundary integral techniques (Rajapakse & Gross 1995). Finite difference and finite element solutions can also be obtained, of course, but all these numerical methods suffer from the defect that their accuracy is limited.

Recently it has been shown (Verruijt, 1997, 1998) that the difficulties mentioned by Sokolnikoff can be surmounted, by using a conformal mapping on a circular ring and a representation of the complex potentials by Laurent series, and then assuring the convergence of the analytic functions in the entire ring, including the point corresponding to the point at infinity in the original problem. This leads to a closed form solution, in the form of two converging infinite power series. This approach can also be applied to Mindlin's problem of the excavation of a tunnel in an elastic half plane loaded by its own weight. As the solution is in terms of Muskhelishvili's complex potentials, the displacements and the stresses can easily be derived by differentiation. Numerical values can be obtained with very great accuracy, even for the case of a cavity very close to the free boundary.

2 THE PROBLEM

The problem to be solved refers to the lower half plane $y < 0$, in which stresses are generated by a uniform volumetric weight γ of the material. In this half plane a circular cavity of radius r is produced, at a depth h below the upper surface, which is free of stress, see Figure 2. The problem is supposed to be a model of the engineering process of excavating a tunnel in a uniform material.

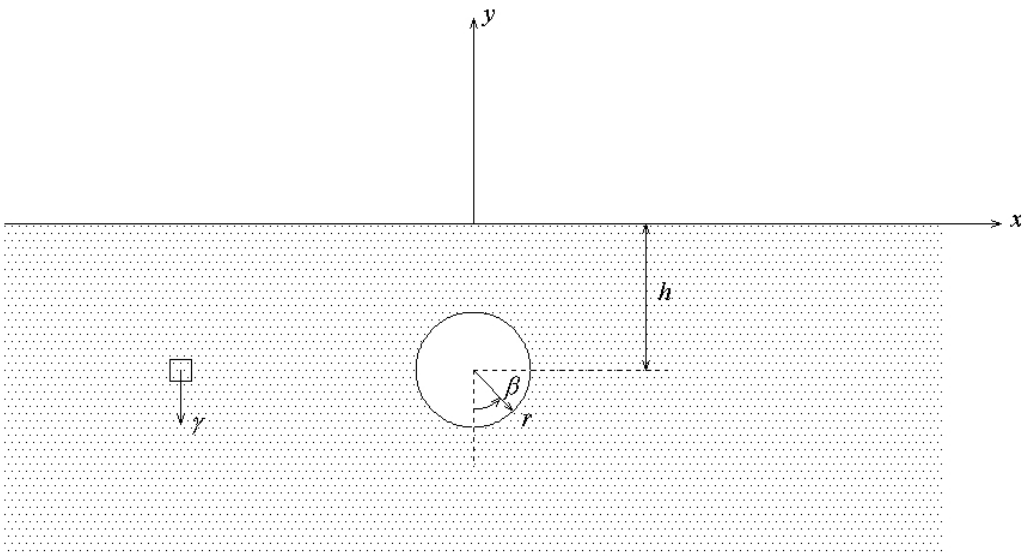

Figure 2. Half plane with circular cavity, definition of geometrical variables.

3 THE SOLUTION

The problem is solved by a superposition of three partial solutions. The first partial solution is the stress distribution in the undisturbed half plane, due to the weight of the material. This is considered to be the initial state; all displacements are considered with respect to this state. The second partial solution is the effect of taking away the resultant force of the weight of the material inside the cavity. For this problem, of a point load in an elastic half plane, a standard solution has been given by Melan (1932). Superposition of the first two partial solutions will lead to a stress distribu-

tion which is in equilibrium with the weight of the material, and satisfies the stress free boundary condition at the upper surface, but which does not satisfy the condition that the boundary of the cavity is also free of stress. For this purpose a third solution is added, for a half plane with a circular cavity, loaded by stresses at the cavity boundary, such that the stresses at this boundary due to a superposition of the three solutions are zero. For this third part of the solution the complex variable method will be used.

3.1 *First partial solution*

The first partial solution is the distribution of stresses in a homogeneous half plane $y < 0$ generated by the uniform volumetric weight of the material. This stress distribution is

$$\sigma_{yy} = \gamma y, \tag{1}$$

$$\sigma_{xx} = K_0 \gamma y, \tag{2}$$

$$\sigma_{xy} = 0, \tag{3}$$

where K_0 is the coefficient of horizontal stress, which is supposed to be a given independent constant, determined by the geological history of the soil. It is emphasized that this constant has no relation with the elastic constants of the material, the shear modulus μ and Poisson's ratio ν.

In civil engineering problems this initial state is usually considered as the reference state for all displacements and deformations. Thus the displacements will be considered with reference to this initial state.

In this initial state the surface tractions at the boundary of the (future) cavity are

$$t_x = -\sigma_{xx} \sin\beta + \sigma_{xy} \cos\beta = -K_0 \gamma y \sin\beta, \tag{4}$$

$$t_y = -\sigma_{xy} \sin\beta + \sigma_{yy} \cos\beta = \gamma y \sin\beta, \tag{5}$$

where the angle β indicates the local slope of the cavity boundary, see Figure 2. These surface tractions are the components of the force per unit area acting upon the material outside the cavity.

1.2 *Second partial solution*

The excavation of a tunnel in a half plane with uniform volumetric weight can be described by assuming that along the circumference of the cavity normal stresses and shear stresses are applied so that the surface tractions along this boundary are annulled. The distribution of the additional stresses on the cavity boundary must be just opposite to the initial stresses along that boundary. A complication in this problem is that these stresses do not form an equilibrium system, as they must balance the total weight of the material inside the cavity. In the solution of problems by the complex variable method, which is the purpose of this paper, a boundary stress distribution having a non-zero resultant force leads to a singularity in the displacements and in the complex potentials. In order to control these singularities it is preferable to consider the part of the solution involving the singularity separately. Therefore the additional solution is separated into two parts: a second part of the total solution taking care of the resultant force of the weight of the material only, and a third part of the solution, with an equilibrium loading system, that finally balances the surface tractions along the cavity boundary.

The second partial solution is the solution of the problem of the elastic half plane $y < 0$, loaded by an upward vertical force in an interior point. This problem has been solved by Melan (1932). The solution can most easily be obtained by starting with the solution of the problem of two opposite forces at two points of a full plane, located symmetrically with respect to the axis $y = 0$, and then balancing the stresses at the surface by solving a Boussinesq type problem for the half plane (Sneddon, 1951). This approach has been followed to determine the stresses and displacements

produced by a concentrated force of magnitude P, acting in upward direction, and applied at the point $x = 0$, $y = -h$ inside the half plane $y < 0$.

The stresses for this second part of the solution are

$$\sigma_{xx} = \frac{P}{4\pi(1-\nu)}\{(1+2\nu)[\frac{y_1}{r_1^2} - \frac{y_2}{r_2^2}] - 2[\frac{y_1^3}{r_1^4} - \frac{y_2^3}{r_2^4}]\} - \frac{P}{\pi}\{\frac{y_1}{r_1^2} + \frac{y(x^2 - y_1^2)}{r_1^4}\} - \frac{Ph}{2\pi(1-\nu)}\{\frac{x^2 - y_1^2}{r_1^4} - \frac{2yy_1(3x^2 - y_1^2)}{r_1^6}\}, \tag{6}$$

$$\sigma_{yy} = \frac{P}{4\pi(1-\nu)}\{(1-2\nu)[\frac{y_1}{r_1^2} - \frac{y_2}{r_2^2}] + 2[\frac{y_1^3}{r_1^4} - \frac{y_2^3}{r_2^4}]\} - \frac{P}{\pi}\{\frac{y_1}{r_1^2} + \frac{y(x^2 - y_1^2)}{r_1^4}\} - \frac{Ph}{2\pi(1-\nu)}\{\frac{x^2 - y_1^2}{r_1^4} + \frac{2yy_1(3x^2 - y_1^2)}{r_1^6}\}, \tag{7}$$

$$\sigma_{xy} = \frac{P}{4\pi(1-\nu)}\{(1-2\nu)[\frac{x}{r_1^2} - \frac{x}{r_2^2}] + 2[\frac{xy_1^2}{r_1^4} - \frac{xy_2^2}{r_2^4}]\} - \frac{P}{\pi}\frac{2xyy_1}{r_1^4} - \frac{Ph}{2\pi(1-\nu)}\frac{2xy(x^2 - 3y_1^2)}{r_1^6}, \tag{8}$$

where $P = \gamma \pi r^2$, the weight of the excavated material, and where

$$y_1 = y - h, \tag{9}$$

$$y_2 = y + h, \tag{10}$$

$$r_1 = \sqrt{x^2 + y_1^2}, \tag{11}$$

$$r_2 = \sqrt{x^2 + y_2^2}. \tag{12}$$

The value of r_2 is the distance from the center of the cavity, which is located at $x = 0$, $y = -h$. The value of r_1 is the distance from the image point $x = 0$, $y = h$.

The displacements are

$$u_x = -\frac{P}{8\pi\mu(1-\nu)}\{\frac{xy_1}{r_1^2} - \frac{xy_2}{r_2^2}\} - \frac{P(1-2\nu)}{2\pi\mu}\arctan(\frac{x}{y_1}) + \frac{Px(y+h)}{2\pi\mu r_1^2} - \frac{Phx(r_1^2 + 2yy_1)}{4\pi\mu(1-\nu)r_1^4}, \tag{13}$$

$$u_y = \frac{P}{8\pi\mu(1-\nu)}\{(3-4\nu)\log(\frac{r_1}{r_2}) + \frac{x^2}{r_1^2} - \frac{x^2}{r_2^2}\} - \frac{P(1-\nu)}{\pi\mu}\log(r_1) + \frac{Py_1^2}{2\pi\mu r_1^2} + \frac{Phy(x^2 - y_1^2)}{4\pi\mu(1-\nu)r_1^4} + u_0, \tag{14}$$

where μ is the shear modulus, ν is Poisson's ratio, and u_0 is an arbitrary constant, which may be related to an arbitrary rigid body displacement. The expressions given above are in agreement, except for the value of the constant, with the results of Sneddon (1951).

It may be noted that the vertical displacement u_y contains a logarithmic singularity. In particular, at the point of application of the concentrated force the value of $r_2 = 0$, which means that the vertical displacement will become infinitely large (in upward direction, the direction of the force). At infinity the vertical displacement will also be infinitely large (and negative). This is in agreement with the well known singular behavior of the displacements of an elastic half plane loaded by a stress distribution having a non-zero resultant force (Timoshenko & Goodier, 1951). For practical purposes an arbitrary constant vertical displacement may be added so that a given point, say a point at depth D, where D is much larger than h, is fixed. This then defines the value of the constant u_0 in eq. (14).

1.3 *Third partial solution*

The third part of the solution is the problem of an elastic half plane with a circular cavity, with a stress distribution along the cavity boundary such that the total tractions due to the sum of the three partial solutions, vanish. This problem will be solved using Muskhelishvili's complex variable method. In this method the solution is expressed in terms of two complex potentials $\varphi(z)$ and $\psi(z)$, which must be analytic functions of the complex variable $z = x + i\,y$ in every point of the region occupied by the elastic material in the physical plane (the half plane $y < 0$ with a circular cavity).

1.3.1 *General considerations*

The stresses are related to the complex potentials by the equations

$$\sigma_{xx} + \sigma_{yy} = 2\{\varphi'(z) + \overline{\varphi'(z)}\}, \tag{15}$$

$$\sigma_{yy} - \sigma_{xx} + 2\,i\sigma_{xy} = 2\{\bar{z}\,\varphi''(z) + \psi'(z)\}, \tag{16}$$

where $\varphi'(z)$ denotes the derivative $d\varphi/dz$, and the overbar indicates the complex conjugate. The displacements are given by

$$2\mu(u_x + i\,u_y) = \kappa\,\varphi(z) - z\,\overline{\varphi'(z)} - \overline{\psi(z)}, \tag{17}$$

where μ is the shear modulus of the material, and κ is a second elastic coefficient, related to Poissons's ratio ν by

$$\kappa = 3 - 4\nu, \tag{18}$$

for plane strain, and

$$\kappa = \frac{3-\nu}{1+\nu}, \tag{19}$$

for plane stress. In this paper plane strain conditions are assumed.

In general the boundary conditions are that on one part of the boundary the displacements are described, and that on the remaining part of the boundary the surface tractions t_x and t_y are prescribed. For this type of boundary conditions it is most convenient to express the boundary condition in terms of the integral of the surface tractions, integrated along the boundary,

$$F = F_a + i\,F_b = i\int_0^s (t_x + i\,t_y)\,ds, \tag{20}$$

where s is the coordinate along the surface, in general a complex function of x and y. The function F is related to the complex potentials $\varphi(z)$ and $\psi(z)$ by the equation

$$F = \varphi(z) + z\overline{\varphi'(z)} - \overline{\psi(z)} + C, \tag{21}$$

where C is a constant, which can be assumed to be zero along a single part of the boundary. In the present case of a double connected region, the constant can be omitted on one boundary, but not on the other boundary.

In order to determine the complex potentials $\varphi(z)$ and $\psi(z)$ by using general properties of analytic functions it seems most convenient to use a conformal mapping of the region R in the physical plane on a circular ring (to be denoted by χ) in the plane of the complex variable $\zeta = \xi + i\,\eta$, because this enables to use the theorem that the Laurent series expansion of an analytic function converges in such a ring shaped region. The conformal mapping on a ring with external radius 1 is, see Figure 3,

$$z = \omega(\varsigma) = -ih\frac{1-\alpha^2}{1+\alpha^2}\frac{1+\varsigma}{1-\varsigma}, \tag{22}$$

where h is the depth of the center of the cavity, and α is a constant, $\alpha < 1$, which defines the size of the cavity. The point $\zeta = -1$ corresponds to the origin in the z–plane, and the point $\zeta = 1$ corresponds to the point at infinity in the z–plane. The parameter h will be used as the reference length for all dimensions in the problem.

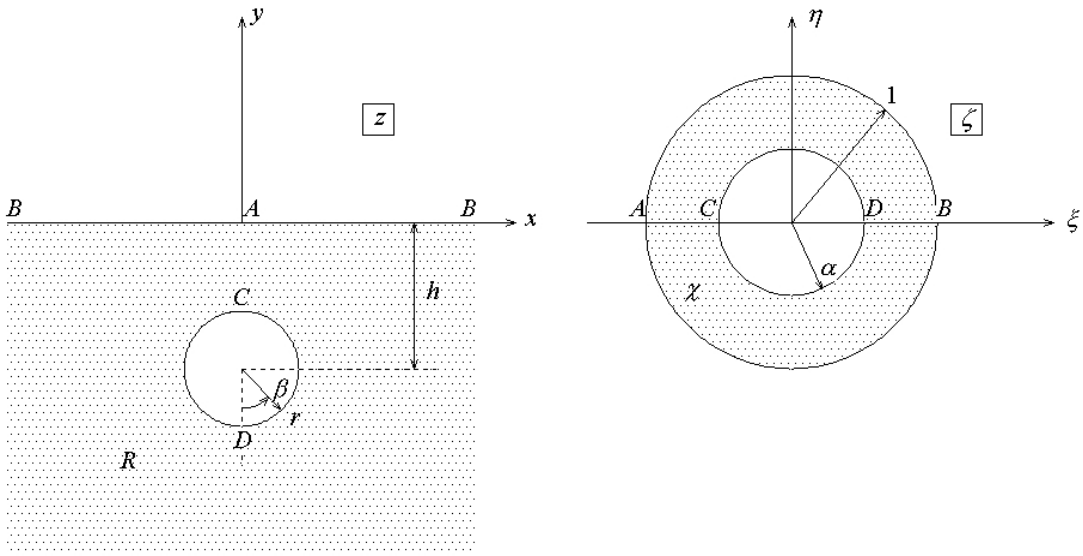

Figure 3. Conformal mapping of physical plane on circular ring.

It can easily be verified that the circle $|\zeta| = 1$ corresponds to the axis $y = 0$, and that the circle $|\zeta| = \alpha$ corresponds to a circle of radius r in the z–plane, with

$$\frac{r}{h} = \frac{2\alpha}{1+\alpha^2}. \tag{23}$$

If $\alpha \to 0$ the radius of the cavity tends towards zero, and when $\alpha \to 0$ the radius approaches the depth of the cavity, so that the covering depth tends towards zero.

Because the conformal transformation function $z = \omega(\zeta)$ is analytic in the region χ, the ring bounded by the two circles $|\zeta| = 1$ and $|\zeta| = \alpha$, the functions $\varphi(z)$ and $\psi(z)$, which must be analytic in the region R, can also be considered as analytic functions of ζ,,

$$\varphi(z) = \varphi(\omega(\zeta)) = \varphi(\zeta), \tag{24}$$

$$\psi(z) = \psi(\omega(\zeta)) = \psi(\zeta), \tag{25}$$

and both these functions are analytic throughout the region χ. It should be noted that the notation is perhaps somewhat confusing. The shape of the functions $\varphi(z)$ and $\varphi(\zeta)$ is different, even though the notation is the same. The short notation for differentiation is that the accent denotes differentiation with respect to the variable indicated, $\varphi'(z) = d\varphi(z)/dz$ and $\varphi'(\zeta) = d\varphi(\zeta)/d\zeta$.

The functions $\varphi(\zeta)$ and $\psi(\zeta)$ are analytic functions of the complex variable ζ in the circular ring χ. It can also be expected that these functions are bounded in that region up to the two circular boundaries, because the loading system on the inner boundary of the region R in the z–plane is in equilibrium. Actually, to achieve this property for the third part of the solution the solution has been separated into three parts, with the first two parts taking care of the effects of gravity and the resultant force of the weight of the excavated material. All this means that the potentials $\varphi(\zeta)$ and $\psi(\zeta)$ can be represented by their Laurent series expansions,

$$\varphi(\zeta) = a_0 + \sum_{k=1}^{\infty} a_k \zeta^k + \sum_{k=1}^{\infty} b_k \zeta^{-k}, \tag{26}$$

$$\psi(\zeta) = c_0 + \sum_{k=1}^{\infty} c_k \zeta^k + \sum_{k=1}^{\infty} d_k \zeta^{-k}. \tag{27}$$

These series expansions will converge in the region χ, including the boundaries $|\zeta| = 1$ and $|\zeta| = \alpha$. The coefficients must be determined from the boundary conditions.

In the present case the boundary conditions are that the surface tractions are zero on the boundary $y = 0$ and on the boundary of the tunnel in the z–plane. Because the first two solutions also have the property that they vanish on the boundary $y = 0$, the third solution should also vanish on that boundary. On the boundary of the tunnel the first two solutions do not vanish, so that the third solution should balance the other two. The boundary conditions can be expressed in terms of the integrated surface traction F, as expressed by eq. (20). The boundary condition is, see eq. (21),

$$F_3 = \varphi(z) + z\,\overline{\varphi'(z)} - \overline{\psi(z)} + C, \tag{28}$$

where F_3, the boundary value for the third part of the solution, is supposed to be given. In order to transform this condition into terms of the variable ζ it may be noted that

$$\varphi'(z) = d\varphi/dz = (d\varphi/d\zeta)(d\zeta/dz) = \varphi'(\zeta)/\omega'(\zeta). \tag{29}$$

Using this property the transformed boundary condition is

$$F_3(\zeta_0) = \varphi(\zeta_0) + \frac{\omega(\zeta_0)}{\overline{\omega'(\zeta_0)}}\,\overline{\varphi'(\zeta_0)} + \overline{\psi'(\zeta_0)} + C, \tag{30}$$

where ζ_0 denotes a point on the boundary considered, in the ζ–plane. Such a point will also be written as $\zeta_0 = \rho\exp(i\theta)$.

In general the derivative of the mapping function (22) is

$$\omega'(\varsigma) = -2ih\frac{1-\alpha^2}{1+\alpha^2}\frac{1}{(1-\varsigma)^2}. \tag{31}$$

On a circle in the ζ–plane the value of ζ is: $\zeta = \zeta_0 = \rho\sigma$, where $\sigma = \exp(i\theta)$. It now follows that

$$\frac{\omega(\zeta_0)}{\overline{\omega'(\zeta_0)}} = -\frac{(1+\rho\sigma)(\sigma-\rho)^2}{2\sigma^2(1-\rho\sigma)}. \tag{32}$$

The two boundary conditions will next be elaborated separately.

1.1.2 *The outer boundary*

On the outer boundary, which corresponds to the upper boundary of the half plane, the radius ρ = 1. The expression (32) now reduces to the simple form

$$\rho = 1: \quad \frac{\omega(\zeta_0)}{\overline{\omega'(\zeta_0)}} = -\frac{(1-\sigma^2)}{2\sigma^2} = \tfrac{1}{2}(1-\sigma^{-2}). \tag{33}$$

On this boundary the value of the integrated surface traction function must be zero, $F = 0$. It is now assumed that on this boundary the value of the integration constant C = 0. This may be done on one of the boundaries of a multiply-connected region without loss of generality (Sokolnikoff, 1956). Substitution of (33) into (30) now gives, using the expressions (26) and (27) for the potential functions,

$$\begin{aligned}\sum_{k=1}^{\infty} a_k\sigma^k + \sum_{k=1}^{\infty} b_k\sigma^{-k} + \tfrac{1}{2}\sum_{k=1}^{\infty}(k+1)\overline{a_{k+1}}\sigma^{-k} - \tfrac{1}{2}\sum_{k=2}^{\infty}(k-1)\overline{b_{k-1}}\sigma^{k} \\ - \tfrac{1}{2}\sum_{k=2}^{\infty}(k-1)\overline{a_{k-1}}\sigma^{-k} + \tfrac{1}{2}\sum_{k=1}^{\infty}(k+1)\overline{b_{k+1}}\sigma^{k} + a_0 + \tfrac{1}{2}\overline{a_1} + \tfrac{1}{2}\overline{b_1} \\ + \overline{c_0} + \sum_{k=1}^{\infty}\overline{c_k}\sigma^{-k} + \sum_{k=1}^{\infty}\overline{d_k}\sigma^{k} = 0.\end{aligned} \tag{34}$$

This is a power series, the sum of which must be zero. That will be the case for all possible values of σ if and only if the coefficients of all powers are zero. This leads to a set of equations from which the coefficients c_k and d_k can be determined. The result is

$$c_0 = -\overline{a_0} - \tfrac{1}{2}a_1 - \tfrac{1}{2}b_1\,, \tag{35}$$

$$c_k = -\overline{b_k} + \tfrac{1}{2}(k-1)\,a_{k-1} - \tfrac{1}{2}(k+1)\,a_{k+1}\,, \qquad k = 1,2,3,... \tag{36}$$

$$d_k = -\overline{a_k} + \tfrac{1}{2}(k-1)\,b_{k-1} - \tfrac{1}{2}(k+1)\,b_{k+1}\,, \qquad k = 1,2,3,... \tag{37}$$

One half of the unknown coefficients have now been expressed into the other half. If the coefficients a_k and b_k can be found from the other boundary condition, the determination of c_k and d_k from the equations (35) – (37) is straightforward.

1.1.3 *The inner boundary*

On the inner boundary, which corresponds to the boundary of the circular cavity, the radius $\rho = \alpha$. In this case eq. (32) gives

$$\rho = \alpha: \quad \frac{\omega(\zeta_0)}{\overline{\omega'(\zeta_0)}} = \frac{-\alpha\sigma - (1-2\alpha^2) + \alpha(2-\alpha^2)\sigma^{-1} - \alpha^2\sigma^{-2}}{2(1-\alpha\sigma)}. \tag{38}$$

In contrast with the other boundary, see eq. (33), this factor now appears to be relatively complex, especially because of the factor $(1-\alpha\sigma)$ in the denominator. In order to eliminate this difficulty all terms in the boundary condition are multiplied with this factor. It may be noted that this factor is never zero in the ring, because $\alpha < 1$ and $|\sigma| = 1$. The boundary condition, eq. (30), is now written as

$$F_3^*(\alpha\sigma) - C(1-\alpha\sigma) = (1-\alpha\sigma)[\varphi(\alpha\sigma) + \frac{\omega(\alpha\sigma)}{\overline{\omega'(\alpha\sigma)}}\,\overline{\varphi'(\alpha\sigma)} + \overline{\psi'(\alpha\sigma)}\,], \tag{39}$$

where

$$F_3^*(\alpha\sigma) = (1-\alpha\sigma)\, F_3(\alpha\sigma). \tag{40}$$

By writing the boundary condition in the form (39) the singularity in the second term of the right hand side has been removed. All terms in the right hand side can now be expressed as series expansions in powers of σ.

It is now assumed that in the boundary condition the function $F_3(\alpha\sigma)$ can be written as

$$F_3(\alpha\sigma) = \sum_{k=-\infty}^{\infty} B_k \sigma^k, \tag{41}$$

where the coefficients B_k are given, or can be determined, for instance by Fourier analysis of the surface tractions along the cavity boundary. The modified boundary function $F_3^*(\alpha\sigma)$ is written as

$$F_3^*(\alpha\sigma) = \sum_{k=-\infty}^{\infty} A_k \sigma^k. \tag{42}$$

The coefficients A_k can easily be calculated from the coefficients B_k, using the definition (40),

$$A_k = B_k - \alpha B_{k-1}, \qquad k = -\infty,\ldots,\infty. \tag{43}$$

At this stage the coefficients Ak are considered as known. Their actual calculation will be performed in the next section.

Substitution of the series expansions for the complex potentials $\varphi(\alpha\sigma)$ and $\psi(\alpha\sigma)$ and for the boundary function $F^*(\alpha\sigma)$ into the modified boundary condition (39) leads to an equation in the form of a power series, with negative and positive powers of σ. The coefficients c_k and d_k can be eliminated from this equation by using the equations (35) – (37). If the equation is written in such a form that the sum of the power series is zero, it follows that the coefficients of all powers of σ must be zero. After some elementary algebraic manipulations this leads to the following set of recurrent equations, valid for all values of $k > 0$,

$$(1-\alpha^{2k+2})a_{k+1} + (1-\alpha^2)(k+1)\overline{b_{k+1}} = \alpha^2(1-\alpha^{2k})a_k + (1-\alpha^2)k\overline{b_k} - A_{k+1}\alpha^{k+1}, \tag{44}$$

$$(1-\alpha^2)\alpha^{2k}(k+1)a_{k+1} + (1-\alpha^{2k+2})\overline{b_{k+1}} = (1-\alpha^2)\alpha^{2k}ka_k + (1-\alpha^{2k})\overline{b_k} - \overline{A_{-k}}\alpha^k. \tag{45}$$

From these equations the coefficients a_{k+1} and b_{k+1} can be determined, if a_k and b_k are known. This requires the solution of a system of two equations with two unknowns. The solution can be given explicitly, of course, but it may well be more convenient to solve the system numerically.

The first two coefficients, a_1 and b_1 and the constant C, can be obtained by considering the coefficients of the powers σ^0 and σ^1. This gives

$$(1-\alpha^2)(a_1 + \overline{b_1}) + \overline{C} = -\overline{A_0}, \tag{46}$$

$$(1-\alpha^2)(a_1 + \overline{b_1}) - C\alpha^2 = -A_1\alpha. \tag{47}$$

It follows from these two equations, by subtraction, that

$$\overline{C} + C\alpha^2 = -\overline{A_0} + A_1\alpha, \tag{48}$$

which determines the integration constant C. Then the combination $a_1 + \overline{b_1}$ can be determined from either of the equations (46) or (47), but its complex conjugate, $\overline{a_1} + b_1$, and the value of a_0, remain undetermined by the procedure. This means that some additional conditions are needed to uniquely determine all coefficients of the solution.

The coefficient a_0, which represents a constant term in the power series for the function $\varphi(\zeta)$, can be considered to be related to an arbitrary rigid body displacement, which produces no stresses in the material. It can easily be seen from the basic equations of the complex variable method, as presented in section 3.3.1, that the addition of a constant to the complex potential $\varphi(z)$ only influences the displacements, by a uniform constant. This means that the coefficient a_0 can be chosen such that a given convenient point in the field is fixed, for instance a point at a certain depth below the tunnel.

Because the value of $\overline{a_1} + b_1$ is still undetermined it seems as if one of these constants can be chosen arbitrarily, and then all other constants can be determined from the equations (44) – (46). An additional requirement may be obtained, however, by noting that the recurrent system of equations (44) and (45) does not guarantee that the coefficients will tend towards zero as $k \to \infty$, and this is a necessary condition for the power series to converge for all values of ζ in the ring. Thus the first constant a_1 can be determined by first assuming that $a_1 = 0$, calculating b_1 from eq. (46) or (47), and then calculating all further coefficients from (44) and (45). This will lead to a limiting value of a_k for $k \to \infty$, probably unequal to zero. This process can then be repeated with a different starting value, say $a_1 = 1$, which will lead to a different limiting value of a_k for $k \to \infty$. The correct value of a_1 can finally be determined by linear interpolation, using the requirement that $a_k \to 0$ for $k \to \infty$. Actually, the procedure can still be somewhat simplified by noting that the system of equations in its homogeneous form admits a solution in which

$$a_{k+1} = -\overline{b_{k+1}} = a_k = -\overline{b_k}\,. \tag{49}$$

This means that a limiting value of the coefficient $a_k = 0$ for $k \to \infty$ can also be achieved by starting with an arbitrary value of a_1, calculating the limiting value of a_k for $k \to \infty$, and then subtracting that limiting value from all coefficients a_k and $-\overline{b_k}$. When all coefficients a_k and b_k have been determined the coefficients c_k and d_k can be determined from eqs. (35) – (37). This completes the solution.

1.4 *Series expansion of the boundary condition*

The last remaining part of the problem is to perform the expansion of the boundary function $F_3(\alpha\sigma)$ in the form of a power series in the variable σ, see eq. (41). This function expresses the surface tractions along the cavity boundary in the third part of the solution, which should balance the sum of the surface tractions in the first two parts of the solution in order to satisfy the boundary condition that in the total solution the surface tractions along the stress-free cavity vanish,

$$F_3 = -F_1 - F_2\,, \tag{50}$$

where F_1 and F_2 represent the values of the function F, as defined in eq. (20), for the first and the second solution, respectively.

In principle the functions F_1 and F_2 are completely determined by the full solutions of the first and second partial solutions given in sections 3.1 and 3.2. In the analysis these functions have to be expressed in terms of the variable σ, in the plane of the transformation variable ζ, however, and the transformation of the expressions is not trivial.

1.4.1 *First partial solution*

For the first partial solution, the stresses due to gravity in a half plane, the surface tractions along the boundary of the cavity are given by eqs. (4) and (5),

$$t_x = -K_0\gamma y \sin\beta = K_0\gamma(h + r\cos\beta), \tag{51}$$

$$t_y = \gamma y \sin\beta = -\gamma(h + r\cos\beta), \tag{52}$$

where the angle β indicates the local slope of the cavity boundary, see Figure 4, and where it has been used that on the cavity boundary $y = -h - r\cos\beta$. The surface tractions are the components of the force per unit area acting upon the material outside the cavity.

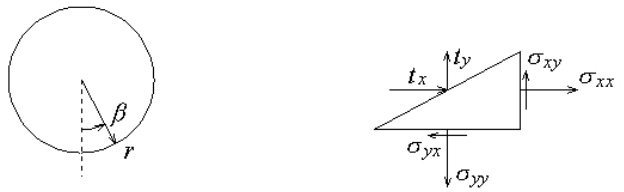

Figure 4. Surface tractions on cavity boundary.

The integrated surface traction now is, using the definition (20),

$$F_1 = i\int_0^s (t_x + i\,t_y)\,ds = -i\,r\int_0^\beta (t_x + i\,t_y)\,d\beta, \tag{53}$$

which gives, with (51) and (52),

$$\frac{F_1}{\gamma\pi r^2} = -\frac{\beta}{2\pi} - \frac{\sin 2\beta}{4\pi} - \frac{h}{\pi r} - \frac{iK_0}{\pi}\left[\frac{h}{r}(1-\cos\beta) + \tfrac{1}{4}(1-\cos 2\beta)\right]. \tag{54}$$

In this equation the total force has been expressed into the total weight of the material in the cavity, $\gamma\pi r^2$, the basic parameters K_0 and r/h of the problem, and the angle β. When β increases from 0 to 2π the value of F_1 decreases by $\gamma\pi r^2$, as could be expected.

The expression (54), which is a function of the angle β in the z–plane, must now be transformed into the coordinate θ along the image of the cavity boundary in the ζ–plane. For this purpose the conformal transformation (22) may be used,

$$z = \omega(\varsigma) = -ih\frac{1-\alpha^2}{1+\alpha^2}\frac{1+\varsigma}{1-\varsigma}, \tag{55}$$

where now, on the boundary of the cavity, $\zeta = \alpha\exp(i\theta) = \alpha\sigma$, and $z = -ih - ir\exp(i\beta)$. Substitution of these relations into (55) gives

$$\exp(i\beta) = \exp(i\theta)\frac{1-\alpha/\sigma}{1-\alpha\sigma}. \tag{56}$$

Taking the logarithm gives

$$\beta = \theta + i\log\left[\frac{1-\alpha/\sigma}{1-\alpha\sigma}\right]. \tag{57}$$

Using the well known series expansion

$$\log(1-\zeta) = -\sum_{k=1}^{\infty}\frac{\zeta^k}{k}, \tag{58}$$

convergent if $|\zeta| < 1$, the variable β can now be expressed in the form of two power series in σ,

$$\beta = \theta + i\sum_{k=1}^{\infty}\alpha^k\sigma^k - i\sum_{k=1}^{\infty}\alpha^k\sigma^{-k}. \tag{59}$$

On the basis of the relation (56) it can also be derived that

$$\cos\beta = -\alpha + \frac{1-\alpha^2}{2\alpha}[\frac{\alpha\sigma}{1-\alpha\sigma} + \frac{\alpha/\sigma}{1-\alpha/\sigma}], \tag{60}$$

and

$$\sin\beta = -i\frac{1-\alpha^2}{2\alpha}[\frac{\alpha\sigma}{1-\alpha\sigma} - \frac{\alpha/\sigma}{1-\alpha/\sigma}]. \tag{61}$$

These expressions can be written in the form of power series by using the general relation

$$\frac{\zeta}{1-\zeta} = \sum_{k=1}^{\infty}\zeta^k, \tag{62}$$

which is also convergent for all ζ such that $|\zeta| < 1$.

Similarly, it can be derived from (56) that

$$\cos 2\beta = \alpha^2 - \frac{1-\alpha^4}{2\alpha^2}[\frac{\alpha\sigma}{1-\alpha\sigma} + \frac{\alpha/\sigma}{1-\alpha/\sigma}] + \frac{(1-\alpha^2)^2}{2\alpha^2}[\frac{\alpha\sigma}{(1-\alpha\sigma)^2} + \frac{\alpha/\sigma}{(1-\alpha/\sigma)^2}], \tag{63}$$

and

$$\sin 2\beta = i\frac{1-\alpha^4}{2\alpha^2}[\frac{\alpha\sigma}{1-\alpha\sigma} - \frac{\alpha/\sigma}{1-\alpha/\sigma}] - i\frac{(1-\alpha^2)^2}{2\alpha^2}[\frac{\alpha\sigma}{(1-\alpha\sigma)^2} + \frac{\alpha/\sigma}{(1-\alpha/\sigma)^2}]. \tag{64}$$

These expressions can be written in the form of power series by using the general relation

$$\frac{\zeta}{(1-\zeta)^2} = \sum_{k=1}^{\infty} k\zeta^k, \tag{65}$$

which is also a convergent series for all ζ such that $|\zeta| < 1$. This condition is certainly met, because the radius of the inner circle in the ζ–plane is always smaller than 1, the radius of the outer circle.

Using these results the function F_1, as given by eq. (54), can be written as

$$\frac{F_1}{\gamma\pi r^2} = -\frac{\theta}{2\pi} + C_1 + \sum_{k=1}^{\infty} P_k\sigma^k + \sum_{k=1}^{\infty} Q_k\sigma^{-k}, \tag{66}$$

where C_1 is a constant that can be incorporated into the constant in the complete function F, and where

$$P_k = i[\frac{1}{2\pi k} + \frac{(1+K_0)(1-\alpha^4)}{8\pi\alpha^2} + \frac{k(1+K_0)(1-\alpha^2)^2}{8\pi\alpha^2}]\alpha^k, \tag{67}$$

$$Q_k = -i[\frac{1}{2\pi k} + \frac{(1-K_0)(1-\alpha^4)}{8\pi\alpha^2} + \frac{k(1-K_0)(1-\alpha^2)^2}{8\pi\alpha^2}]\alpha^k. \tag{68}$$

Equation (66) is the representation of the boundary function F for the first part of the solution in the form of a power series in σ, except for the first term. It can be expected, however, that this non-periodic term, which represents the total force, will be balanced by a similar term from the second part of the solution.

1.4.2 *Second partial solution*

For the second partial solution, the stresses due to an upward force equal to the weight of the material in the cavity in an elastic half plane, the surface tractions along the boundary of the cavity can be derived from the complex potentials by using the general relation (21),

$$F_2 = \varphi_2(z) + z\,\overline{\varphi_2'(z)} - \overline{\psi_2(z)}, \tag{69}$$

where the integration constant can be omitted, because it is included in the third partial solution. In order to apply eq. (69) the complex potentials for this part of the solution must be known. These can be back-calculated from the solution given in paragraph 3.2. This gives

$$\varphi_2(z) = -\frac{iP}{2\pi}\log(z-ih) + \frac{iP}{8\pi(1-\nu)}\log\left(\frac{z-ih}{z+ih}\right) + \frac{P}{4\pi(1-\nu)}\,\frac{h}{z-ih}, \tag{70}$$

$$\begin{aligned}\psi_2(z) = -\frac{iP}{2\pi}\log(z-ih) + \frac{iP}{8\pi(1-\nu)}\left[(3-4\nu)\log\left(\frac{z-ih}{z+ih}\right) + \frac{ih}{z-ih} + \frac{ih}{z+ih}\right] \\ - \frac{P(1-2\nu)}{4\pi(1-\nu)}\,\frac{h}{z-ih} + \frac{P}{4\pi(1-\nu)}\,\frac{hz}{(z-ih)^2},\end{aligned} \tag{71}$$

where, as before, $P = \gamma\pi r^2$. It can easily be verified that the expressions for the stresses and the displacements for the second partial solution given in section 3.2 can be derived from (70) and (71) using the general formulas of Kolosov-Muskhelishvili, eqs. (15) – (17).

Substitution of (70) and (71) into (69) leads to an expression for the boundary function F_2 as a function of the variable z, which may be transformed into a function of the variable ζ by using the conformal transformation (22). In order to write this function, for points on the inner boundary $|\zeta| = \alpha$, in the form of a power series in $\sigma = \exp(i\theta)$, the terms of the expression F_2 may be expanded by using similar operations as used in the previous section for the first partial solution. The details of this analysis are omitted here. The result is

$$\frac{F_2}{\gamma\pi r^2} = \frac{\theta}{2\pi} + C_2 + \sum_{k=1}^{\infty} R_k\sigma^k + \sum_{k=1}^{\infty} S_k\sigma^{-k}, \tag{72}$$

where C_2 is a constant, and where

$$\begin{aligned}R_k = i\left[-\frac{7-8\nu}{8\pi(1-\nu)k} + \frac{(1-\alpha^4)}{8\pi(1-\nu)\alpha^2} - \frac{1-\alpha^2}{2\pi(1+\alpha^2)} - \frac{k(1-\alpha^2)^2}{8\pi(1-\nu)\alpha^2}\right]\alpha^k \\ + i\left[\frac{3-4\nu}{8\pi(1-\nu)k} - \frac{(1-\alpha^4)}{8\pi(1-\nu)\alpha^2}\right]\alpha^{3k},\end{aligned} \tag{73}$$

$$S_k = i\left[\frac{5-4\nu}{8\pi(1-\nu)k}\right]\alpha^k - i\left[\frac{1}{8\pi(1-\nu)k} + \frac{1-\alpha^2}{2\pi(1+\alpha^2)} - \frac{k(1-\alpha^2)^2}{8\pi(1-\nu)\alpha^2}\right]\alpha^{3k}, \tag{74}$$

Equation (72) is the representation of the boundary function F for the second part of the solution in the form of a power series in σ. As predicted, the first term, which is not periodic, balances the similar term from the first part of the solution.

1.4.3 *Third partial solution*

Now that the boundary functions from the first and second partial solutions have been expressed in the form of power series, the boundary condition for the third partial solution, which should balance the stresses from the first and second partial solution, can also be formulated in the form of a power

series. Actually it follows from eq. (50) that, apart from a constant term that can be omitted without loss of generality, as it can be incorporated in the constant C in the boundary condition (30),

$$\frac{F_3}{\gamma\pi r^2} = -\sum_{k=1}^{\infty}(P_k + R_k)\sigma^k - \sum_{k=1}^{\infty}(Q_k + S_k)\sigma^{-k}. \tag{75}$$

The basic assumption in the solution method used for the third partial problem was, see section 3.3.3, that this function can be written in the form of eq. (41),

$$F_3 = \sum_{k=-\infty}^{\infty} B_k \sigma^k. \tag{76}$$

It now appears that this expansion is indeed possible, and that the coefficients are

$$B_k = -(P_k + R_k), \quad B_{-k} = -(Q_k + S_k), \quad k = 1,2,3,... \tag{77}$$

It should be noted that it is essential for the solution method to apply that the expansion is fully periodic in the variable θ. Any non-periodic term would destroy the solution. This means that the separation of the solution into three parts, with the second partial solution balancing the force in the cavity, is a necessary element of the solution method.

Now that the coefficients B_k have been found the coefficients Ak can be determined from eq. (43), and then the coefficients a_k and b_k, which define the series expansion of the first complex potential $\varphi(\zeta)$ can be determined from the equations (44) and (45), using the procedure outlined in section 3.3.3 to determine the integration constant and the first coefficient. Finally, the coefficients c_k and d_k, which define the series expansion of the second complex potential $\psi(\zeta)$ can be determined from the equations (35) – (37).

1.5 *Completion of the solution*

The solution can be completed by determining the stresses and the displacements, using the Kolosov-Muskhelishvili formulas (15) – (17). This requires evaluation of the first and second derivatives of the complex potentials, considered as functions of the variable z in the physical plane. These can easily be obtained from the derivatives in the ζ–plane, using relations of the type (29).

4 RESULTS

In order to verify the consistency and the accuracy of the solution a computer program has been written to perform all the calculations. This program (named MINDLIN in honor of the man who first determined the stresses) enables to evaluate numerical values of the stresses and displacements, and to verify the boundary conditions. It also has features to present the results in graphical and tabular form. Some examples will be given below.

The solution and the computer program can be validated by checking that the surface tractions along the two boundaries, the upper surface and the boundary of the cavity, are indeed zero. It appears that all these conditions are met with great accuracy, with errors usually smaller than 0.000001, provided that the number of terms in the Laurent series expansions of the complex potentials is sufficiently large. The number of terms needed for sufficient accuracy is calculated in the computer program by taking just enough terms to obtain practical convergence of the Laurent series, as indicated by the coefficients of the series for the potentials and their derivatives going to zero. For very large cavities this may mean that a large number of terms has to betaken into account. For r/h = 0.99 the number of terms needed for convergence is about 200, and for r/h = 0.999 the number of terms needed is about 500. For smaller cavities convergence is much faster. If r/h = 0.5, which is already a rather large cavity, only about 30 terms are needed to obtain sufficient accuracy.

The computation of the displacements in the program is based upon the addition of the second and the third partial solutions only, so that only the effect of the excavation is calculated, with the

initial state being the reference state. Because the second solution contains a logarithmic singularity, the displacements at infinity are infinitely large. In the solution implemented in the computer program a rigid body motion has been added so that the point with coordinates $x = 0$, $y = -D$ remains fixed in space. The value of the depth D must be supplied by the user.

As an illustration some results are shown below in graphical form.

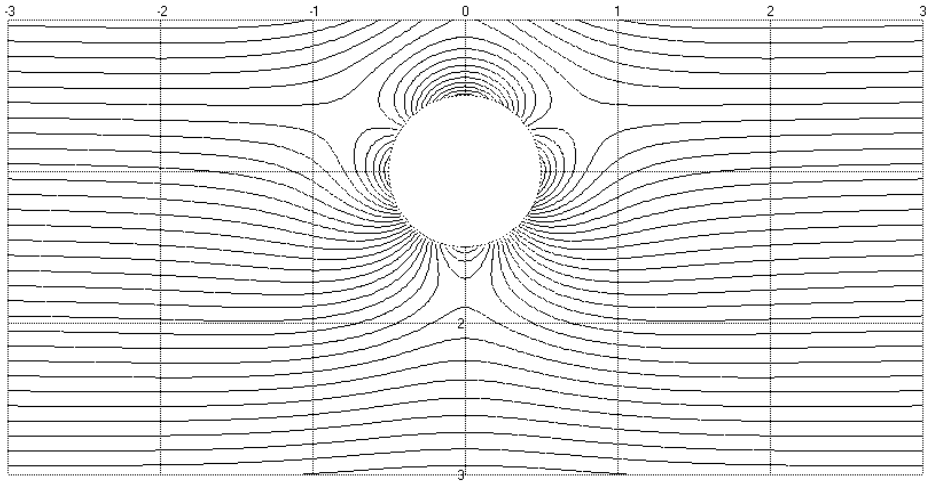

Figure 5. Contours of σ_{xx}, $K_0 = 1$, $\nu = 0.5$, $r/h = 0.5$.

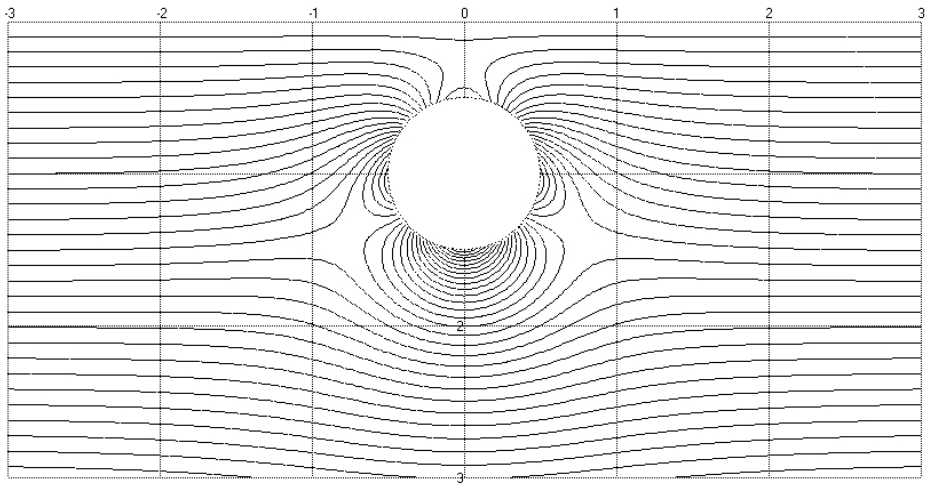

Figure 6. Contours of σ_{yy}, $K_0 = 1$, $\nu = 0.5$, $r/h = 0.5$.

Figures 5, 6 and 7 show the contours of the stresses for the case that $K_0 = 1$, $\nu = 0.5$ and $r/h = 0.5$. The contours have been constructed using an interval $0.1\gamma h$. The precise value of the stresses requires that one value is determined in numerical form. For this purpose the origin of the coordinate system may be used. The computer program indicates that in this case the stresses σ_{yy} and σ_{xy} in this point are zero (as required by the boundary condition), and that $\sigma_{xx} = -0.507379\ \gamma h$. Starting from theses values all values of the stresses in interior points may be determined. Accurate numerical values can best be obtained directly from the computer program, which will print the value of stresses and displacements if values of x and y are entered.

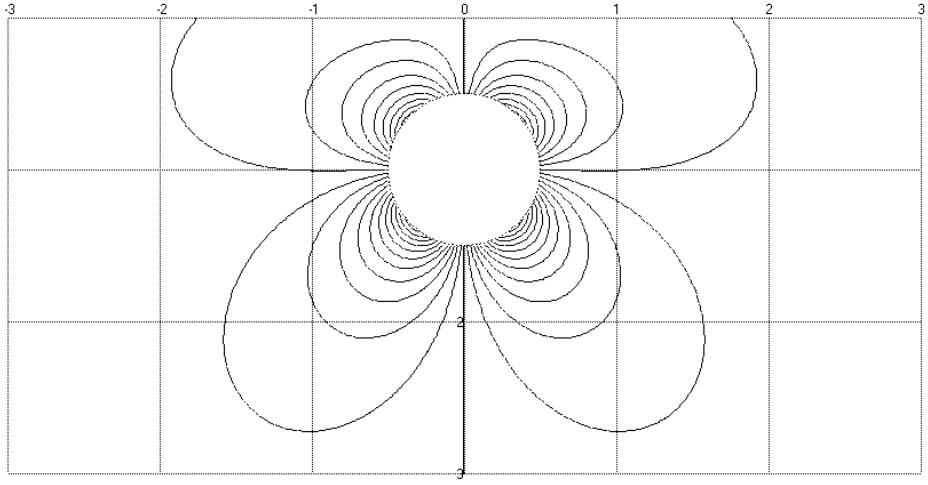

Figure 7. Contours of σ_{xy}, $K_0 = 1$, $\nu = 0.5$, $r/h = 0.5$.

Figure 8 shows the displacements of a grid of horizontal and vertical lines in the field. It appears that in this case, with $K_0 = 1$ and $\nu = 0.5$, the shape of the cavity remains practically circular, but it becomes considerably smaller, as may be expected. The value of the displacements can be deduced from the figure by noting that all displacements are expressed as multiples of $\gamma h^2/\mu$, where μ is the shear modulus of the material, and that the computer program uses a multiplication factor for the graphical representation of the displacements, which has been taken as 0.5 in the case of Figure 8. In the figure the vertical displacement of the bottom of the cavity is about 0.4 h (because its value using a scale factor 0.5 is about 0.2 h). This means that the actual displacement is about 0.4 $\gamma h^2/\mu$.

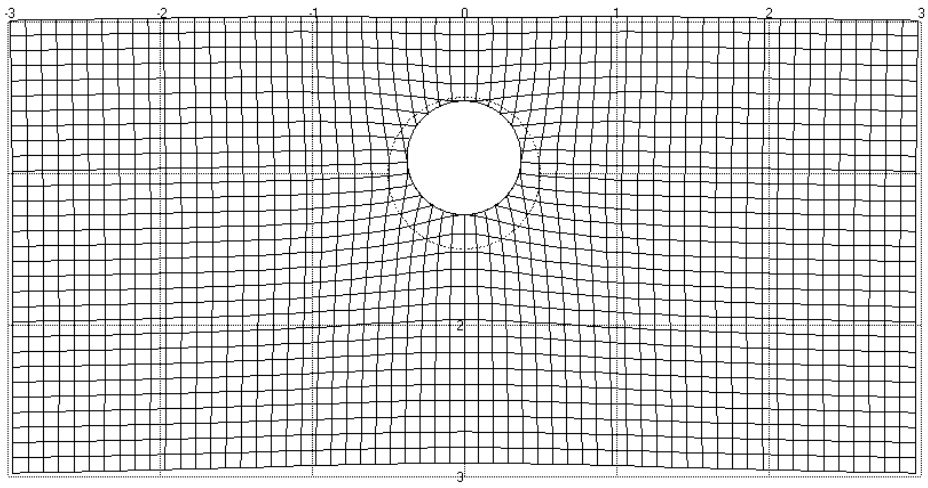

Figure 8. Displacements, $K_0 = 1$, $\nu = 0.5$, $r/h = 0.5$.

In fact, the computer program gives a numerical value $u_y = 0.445347\ \gamma h^2/\mu$ for this point.

In order to show the influence of the coefficient of initial lateral stress, Figure 9 shows the displacements for the case that $K_0 = 0$, $\nu = 0.5$ and $r/h = 0.5$. It appears that this coefficient has a very large influence, indeed. There now is practically no horizontal contraction of the cavity. This is probably due to the fact that in this case the initial horizontal stress is zero, whereas in the case of Figure 8 the initial horizontal stress is as large as the vertical stress. This means that in the case of

Figure 9 the creation of the cavity does not require the addition of a horizontal tension stress. It also appears that the vertical displacement of the bottom of the cavity is somewhat larger.

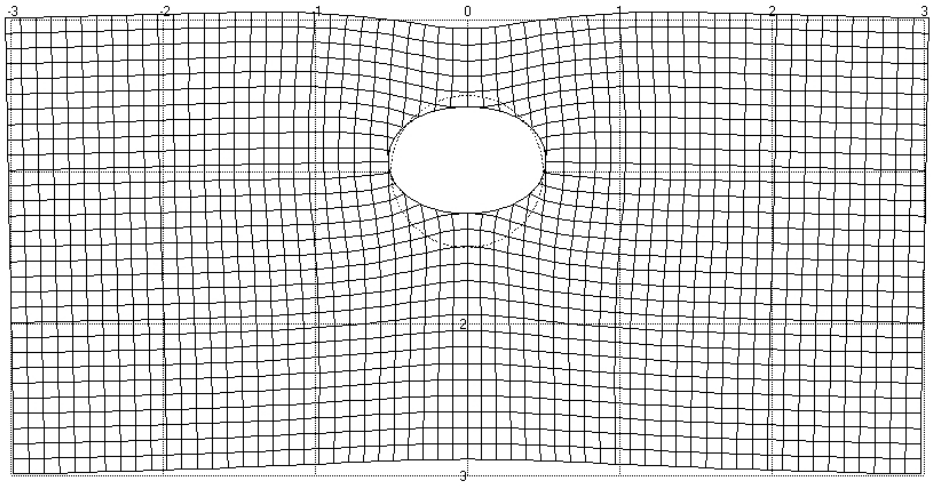

Figure 9. Displacements, $K_0 = 0$, $\nu = 0.5$, $r/h = 0.5$.

5 MINDLIN'S DATA

In his 1940 paper Mindlin published a large number of numerical data, based upon his solution of the problem using bipolar coordinates, giving one of the most important variables, the tangential stress along the cavity boundary. These same data can be calculated using the complex variable method and the computer program MINDLIN developed for the analysis. The parameters used by Mindlin were an angle (β), which can be identified with the angle θ in the complex variable solution (the angle in the ζ–plane). The second parameter used by Mindlin was denoted by α_1, which can be related to the parameter *r/h* by

$$\cosh \alpha_1 = h / r, \tag{78}$$

where, as before, h is the depth of the center of the cavity and r is the radius of the cavity. For the values of α_1 used in Mindlin's tables the corresponding value of *r/h*, which is an input parameter of the computer program, is given in Table 1.

Table 1. Relation between *r/h* and Mindlin's parameter α_1

α_1	*r/h*
0.2	0.980328
0.4	0.925007
0.6	0.843551
0.8	0.747700
1.0	0.648054
1.2	0.552286
1.4	0.464922
1.6	0.387978
1.8	0.321805
2.0	0.265802

The values given by Mindlin in his tables have been recalculated using the method described in this paper, and they have been assembled in tables similar in form to those of Mindlin. Comparison with Mindlin's original tables shows that his values were in general remarkably accurate. The present tables also give values for some combinations of the parameters that were not given in the

original tables, namely those for large cavities (with α_1 = 0.2), which require a large number of terms in the analysis. A few numerical values require correction, but most of the original values are found to be accurate within an accuracy of ± 0.01.

Table 2. Tangential stress at the cavity boundary

α_1	θ									
	0	20	40	60	80	100	120	140	160	180
ν = 0, K_o = 1										
0.2	-1.63	-0.66	-0.50	-0.46	-0.51	-0.65	-0.86	-1.09	-1.27	-1.34
0.4	-1.69	-1.07	-0.77	-0.71	-0.69	-0.65	-0.57	-0.49	-0.43	-0.40
0.6	-1.80	-1.42	-1.06	-0.93	-0.86	-0.76	-0.62	-0.46	-0.34	-0.29
0.8	-1.96	-1.72	-1.37	-1.19	-1.07	-0.93	-0.76	-0.59	-0.45	-0.40
1.0	-2.18	-2.01	-1.71	-1.49	-1.33	-1.17	-0.98	-0.80	-0.66	-0.61
1.2	-2.46	-2.33	-2.07	-1.84	-1.65	-1.46	-1.27	-1.09	-0.95	-0.90
1.4	-2.81	-2.71	-2.49	-2.25	-2.03	-1.83	-1.63	-1.44	-1.31	-1.26
1.6	-3.25	-3.17	-2.97	-2.73	-2.50	-2.28	-2.07	-1.89	-1.76	-1.71
1.8	-3.79	-3.72	-3.54	-3.31	-3.07	-2.84	-2.62	-2.44	-2.31	-2.27
2.0	-4.45	-4.39	-4.22	-4.00	-3.75	-3.51	-3.29	-3.11	-2.98	-2.94
ν = 1/4, K_o = 1										
0.2	-1.63	-0.63	-0.42	-0.35	-0.45	-0.74	-1.18	-1.66	-2.03	-2.17
0.4	-1.67	-1.05	-0.73	-0.66	-0.66	-0.69	-0.74	-0.78	-0.81	-0.85
0.6	-1.77	-1.39	-1.02	-0.89	-0.84	-0.79	-0.73	-0.66	-0.60	-0.58
0.8	-1.93	-1.68	-1.33	-1.15	-1.05	-0.96	-0.85	-0.74	-0.65	-0.62
1.0	-2.14	-1.97	-1.67	-1.45	-1.31	-1.19	-1.06	-0.93	-0.83	-0.79
1.2	-2.41	-2.29	-2.03	-1.80	-1.63	-1.48	-1.33	-1.19	-1.09	-1.05
1.4	-2.76	-2.66	-2.44	-2.21	-2.02	-1.85	-1.69	-1.54	-1.44	-1.40
1.6	-3.19	-3.11	-2.92	-2.69	-2.49	-2.30	-2.13	-1.98	-1.88	-1.84
1.8	-3.73	-3.66	-3.49	-3.27	-3.05	-2.85	-2.67	-2.52	-2.42	-2.38
2.0	-4.39	-4.33	-4.17	-3.96	-3.74	-3.53	-3.34	-3.19	-3.08	-3.05
ν = 1/2, K_o = 1										
0.2	-1.61	-0.57	-0.26	-0.14	-0.33	-0.91	-1.81	-2.79	-3.56	-3.85
0.4	-1.64	-0.99	-0.63	-0.54	-0.59	-0.78	-1.06	-1.35	-1.58	-1.67
0.6	-1.72	-1.33	-0.93	-0.80	-0.79	-0.85	-0.95	-1.05	-1.12	-1.15
0.8	-1.86	-1.61	-1.25	-1.07	-1.01	-1.01	-1.02	-1.04	-1.05	-1.06
1.0	-2.06	-1.89	-1.58	-1.37	-1.28	-1.23	-1.20	-1.18	-1.16	-1.15
1.2	-2.32	-2.20	-1.94	-1.73	-1.60	-1.52	-1.46	-1.41	-1.38	-1.36
1.4	-2.66	-2.56	-2.35	-2.14	-1.99	-1.88	-1.80	-1.74	-1.69	-1.68
1.6	-3.08	-3.00	-2.82	-2.62	-2.46	-2.33	-2.24	-2.16	-2.11	-2.09
1.8	-3.61	-3.55	-3.39	-3.20	-3.02	-2.88	-2.77	-2.69	-2.63	-2.61
2.0	-4.26	-4.21	-4.06	-3.88	-3.71	-3.56	-3.44	-3.35	-3.29	-3.27

It may be noted that Mindlin's values were reprinted by Poulos & Davis (1974). In the second edition of that publication (Poulos & Davis, 1991) some values have been corrected, but it seems that these corrected values are actually less accurate than Mindlin's values.

Table 3. Tangential stress at the cavity boundary

α_1	θ									
	0	20	40	60	80	100	120	140	160	180
$\nu = 0,\ K_o = 0$										
0.2	1.22	-0.87	-0.99	-1.12	-0.87	-0.10	1.11	2.44	3.48	3.87
0.4	1.22	-1.62	-1.11	-1.10	-0.88	-0.31	0.55	1.50	2.24	2.52
0.6	1.25	-1.60	-1.61	-1.27	-1.00	-0.47	0.31	1.14	1.79	2.03
0.8	1.29	-1.19	-2.17	-1.67	-1.20	-0.63	0.13	0.93	1.54	1.77
1.0	1.37	-0.80	-2.54	-2.25	-1.56	-0.84	-0.03	0.79	1.40	1.62
1.2	1.47	-0.48	-2.74	-2.89	-2.09	-1.15	-0.20	0.67	1.31	1.55
1.4	1.60	-0.22	-2.86	-3.53	-2.78	-1.60	-0.43	0.58	1.29	1.54
1.6	1.79	0.01	-2.96	-4.19	-3.59	-2.22	-0.76	0.48	1.31	1.60
1.8	2.02	0.23	-3.08	-4.88	-4.55	-3.01	-1.20	0.36	1.39	1.75
2.0	2.32	0.46	-3.24	-5.65	-5.65	-4.00	-1.79	0.19	1.52	1.98
$\nu = 1/4,\ K_o = 1/3$										
0.2	0.28	-0.77	-0.75	-0.79	-0.69	-0.37	0.13	0.69	1.13	1.30
0.4	0.27	-1.41	-0.95	-0.91	-0.79	-0.47	0.02	0.55	0.97	1.12
0.6	0.26	-1.51	-1.39	-1.11	-0.93	-0.59	-0.11	0.41	0.82	0.97
0.8	0.24	-1.33	-1.87	-1.47	-1.14	-0.75	-0.25	0.27	0.68	0.83
1.0	0.22	-1.16	-2.22	-1.96	-1.46	-0.97	-0.42	0.13	0.54	0.70
1.2	0.20	-1.05	-2.47	-2.50	-1.93	-1.27	-0.62	-0.02	0.42	0.58
1.4	0.18	-1.00	-2.69	-3.07	-2.51	-1.70	-0.89	-0.19	0.29	0.47
1.6	0.16	-0.99	-2.91	-3.67	-3.22	-2.26	-1.25	-0.40	0.17	0.37
1.8	0.15	-1.03	-3.18	-4.32	-4.04	-2.97	-1.73	-0.66	0.05	0.29
2.0	0.13	-1.10	-3.51	-5.06	-5.01	-3.85	-2.34	-0.99	-0.08	0.23
$\nu = 1/4,\ K_o = 0$										
0.2	1.23	-0.84	-0.91	-1.01	-0.81	-0.19	0.79	1.87	2.71	3.03
0.4	1.24	-1.59	-1.06	-1.04	-0.85	-0.36	0.39	1.22	1.85	2.09
0.6	1.27	-1.57	-1.57	-1.22	-0.98	-0.50	0.20	0.95	1.52	1.74
0.8	1.32	-1.16	-2.13	-1.63	-1.18	-0.65	0.05	0.78	1.34	1.55
1.0	1.40	-0.76	-2.50	-2.21	-1.54	-0.86	-0.10	0.66	1.25	1.44
1.2	1.51	-0.43	-2.69	-2.85	-2.08	-1.17	-0.26	0.57	1.17	1.39
1.4	1.65	-0.17	-2.81	-3.50	-2.76	-1.62	-0.49	0.48	1.16	1.40
1.6	1.84	0.06	-2.91	-4.15	-3.58	-2.23	-0.81	0.39	1.19	1.48
1.8	2.08	0.29	-3.03	-4.84	-4.53	-3.03	-1.25	0.27	1.28	1.63
2.0	2.39	0.52	-3.19	-5.61	-5.64	-4.01	-1.84	0.11	1.42	1.87
$\nu = 1/2,\ K_o = 0$										
0.2	1.24	-0.77	-0.75	-0.80	-0.69	-0.36	0.16	0.74	1.19	1.36
0.4	1.27	-1.54	-0.96	-0.92	-0.79	-0.45	0.07	0.65	1.08	1.25
0.6	1.32	-1.51	-1.49	-1.13	-0.93	-0.56	-0.02	0.56	1.00	1.17
0.8	1.39	-1.09	-2.05	-1.55	-1.14	-0.70	-0.13	0.48	0.94	1.11
1.0	1.48	-0.68	-2.41	-2.14	-1.51	-0.90	-0.24	0.41	0.90	1.08
1.2	1.61	-0.34	-2.60	-2.78	-2.04	-1.20	-0.39	0.35	0.89	1.08
1.4	1.76	-0.07	-2.72	-3.43	-2.73	-1.65	-0.60	0.29	0.90	1.13
1.6	1.95	0.17	-2.81	-4.08	-3.55	-2.27	-0.92	0.21	0.96	1.23
1.8	2.20	0.40	-2.93	-4.77	-4.50	-3.06	-1.35	0.10	1.06	1.40
2.0	2.51	0.64	-3.08	-5.53	-5.61	-4.05	-1.94	-0.05	1.21	1.65

6 CONCLUSIONS

It has been shown that the solution of Mindlin's problem of the excavation of a circular tunnel in an elastic half plane with uniform gravity can be solved in the form of series expansions of Muskhelishvili's complex potentials. This enables an accurate evaluation of the stresses and the displacements. Mindlin's original results for the tangential stress along the cavity boundary have been found to be very accurate, with a small number of exceptions.

7 COMPUTER PROGRAM

The executable version of the program MINDLIN, that performs the computations described in this paper, can be downloaded from the website www.geo.citg.tudelft.nl. A copy of the source code of the program (in C++) can be obtained upon request.

ACKNOWLEDGEMENT

The solution presented in this paper was developed in 1996 when the first author was invited by the second author, the late Professor John R. Booker, to work with him on this problem at the University of Sydney. Professor Booker contributed to the work by discussions on the general approach, by his insistence on a closed form solution, and by making several essential suggestions for this purpose in the form of handwritten notes on various steps in the analysis.

REFERENCES

Callias, C.J. & Markenscoff, X. 1989. Singular asymptotics analysis for the singularity at a hole near a boundary. *Quart. Appl. Math. 47* : 233-245.

Georgiadis, H.G. Rigatos, A.P. & Charalambakis, N.C. 1995. Dynamic stress concentration around a hole in a viscoelastic plate. *Acta Mechanica 111*: 1-12.

Jeffery, G.B. 1920. Plane stress and plane strain in bipolar coordinates. *Trans. Royal Soc. A 221*: 265-293.

Melan, E. 1932. Der Spannungszustand der durch eine Einzelkraft im Innern beanspruchten Halbscheibe. *ZAMM 12* : 343-346.

Mindlin, R.D. 1940. Stress distribution around a tunnel. *Trans. ASCE* : 1117-1153.

Mindlin, R.D. 1948. Stress distribution around a hole near the edge of a plate in tension. *Proc. Soc. Exper. Stess Analysis 5* : 56-67.

Muskhelishvili, N.I. 1953. *Some Basis Problems of the Mathematical Theory of Elasticity.* Translated from the Russian by J.R.M. Radok. Groningen: Noordhoff.

Poulos, H.G. & Davis, E.H. 1974. *Elastic Solutions for Soil and Rock Mechanics.* New York: Wiley.

Poulos, H.G. & Davis, E.H. 1991. *Elastic Solutions for Soil and Rock Mechanics.* 2nd ed. Sydney: Centre for Geotechnical Research.

Rajapakse, R.K.N.D. & Gross, D. 1995. Transient response of an orthotropic elastic medium with a cavity. *Wave Motion 21* : 231-252.

Sneddon, I.N. 1951. *Fourier Transforms.* New York: McGraw-Hill.

Sokolnikoff, I.S. 1956. *Mathematical Theory of Elasticity.* 2nd ed. New York: McGraw-Hill.

Timoshenko, S.P. & Goodier, J.N. 1951. *Theory of Elasticity.* 2nd ed. New York: McGraw-Hill.

Verruijt, A. 1997. A complex variable solution for a deforming circular tunnel in an elastic half-plane. *Int. J. Numer. Methods Geomechanics 21*: 77-89.

Verruijt, A. 1998. Deformations of an elastic half plane with a circular cavity. *Int. J. Solids Structures 21*: 2795-2804.