Verruijt, A. & Strack, O. E. (2008). *Géotechnique* **58**, No. 6, 513–515 [**doi:** 10.1680/geot.2007.00046]

TECHNICAL NOTE

Buoyancy of tunnels in soft soils

A. VERRUIJT* and O. E. STRACK†

KEYWORDS: sands; tunnels

INTRODUCTION

The construction of bored tunnels in soft soils is one of the major achievements of civil engineering in the 20th century. The process minimises the disturbance in the environment, especially in built-up areas, but there may still be some disturbance of the stress field, and some deformation of the soil surrounding the tunnel. In particular, some subsidence above the tunnel may occur, because of the excavation process at the front of the tunnel, and because the dimensions of the tunnel-boring machine are necessarily somewhat larger than the tunnel constructed in its interior. The latter effect is often reduced by the injection of grout between the tunnel elements and the soil, but experience shows that there is usually some subsidence above the tunnel. The simplest problem for theoretical analysis arises when considering the ground loss problem: the deformations caused by a uniform reduction of the radius of a cylindrical cavity. For the surface subsidence due to ground loss, various methods of analysis have been suggested, ranging from analytic solutions assuming elastic or elasto-plastic behaviour to numerical solutions using advanced material modelling of soil behaviour, and empirical methods using some assumed subsidence curve (Peck, 1969). In most of the elastic methods (Sagaseta, 1987; Verruijt & Booker, 1996) the problem considered is an imposed deformation of a circular ring in a half-plane, ignoring other effects. It has been observed (e.g. Loganathan & Poulos, 1998) that the subsidence curve predicted by such elastic solutions is wider than the subsidence curve observed in engineering practice, with the observed subsidence curves being some 50% narrower than the curves predicted from elastic solutions for the ground loss problem. To improve the predictions, various improved methods of analysis have been suggested. Loganathan & Poulos (1998) considered the possible ovalisation of the tunnel and, preferably, the addition of a semi-empirical correction factor. Other possible causes for deviations from an elastic solution are differences between the excavation face pressure and the in situ stresses, plastic deformations of the soil (Osman *et al.*, 2006), and consolidation or creep of the soil after the construction process of the soil. Perhaps the ultimate solution is to use a numerical method, for instance based upon the finite element method, in which elasto-plastic soil behaviour and creep can be incorporated, and even the effect of grouting (Van Jaarsveld *et al.*, 1999; Brinkgreve *et al.*, 2006). Buoyancy will automatically be included in such a model if it starts with an initial state of stress due to gravity of the soil, and then considers the construction of the tunnel as a removal of the soil, the installation of the tunnel, and consolidation or creep of the soil after the construction process, taking into account the effective weight of the various components. If desired, the grouting process can also be included.

The effect to be considered in this paper is the difference in weight of the completed tunnel and the excavated soil, to be denoted as the *buoyancy effect* (Strack, 2002; Strack & Verruijt, 2002). Because the weight of the tunnel is usually less than the weight of the excavated soil, an upward force is exerted on the surrounding soil, and this will affect the deformation and stress field, including a reduced subsidence. The purpose of the present paper is to investigate the influence of the buoyancy effect on the subsidence curve at the surface, and in particular the width of this curve, using a simple homogeneous isotropic elastic model for the soil. Of course, other effects, such as plasticity, consolidation and creep, may also influence the shape of the subsidence curve, but this paper considers the ground loss and buoyancy effects only.

THE PROBLEM AND ITS SOLUTION

The problem to be considered in this paper concerns a cylindrical tunnel, of radius r, at a depth h in an homogeneous isotropic elastic half-space (see Fig. 1). The shear modulus of the material surrounding the tunnel is denoted by G, the Poisson ratio by ν, and the unit weight by γ. Initially, the state of stress in the material is

$$\sigma_{yy} = \gamma y$$
$$\sigma_{xx} = K_0 \gamma y$$
$$\sigma_{xy} = 0$$

where K_0 is the coefficient of neutral earth pressure. Note that in the half-plane $y < 0$ the stresses are negative, which is in agreement with the usual sign convention in theoretical elasticity that tensile stresses are considered positive.

At a certain instant of time the tunnel is excavated, and its radius shrinks by an amount w, a uniform radial displacement in the inward direction (the ground loss problem). The material inside the tunnel is replaced by a rigid circular liner, with an average unit weight (the total weight of the tunnel liner and its contents, per unit cross-sectional area) $\gamma_t = w_t \gamma$, where w_t, the ratio of the average unit weight of

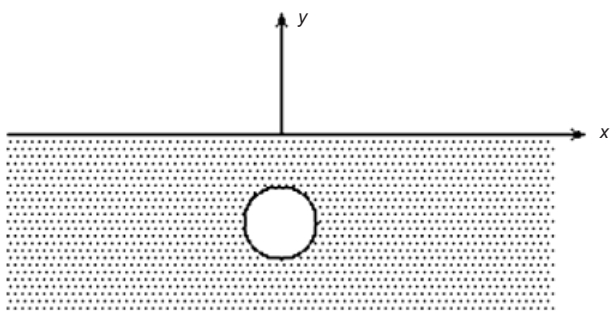

Fig. 1. Cylindrical tunnel in half-plane

Manuscript received 3 April 2007; revised manuscript accepted 28 February 2008
Discussion on this paper closes on 2 February 2009, for further details see p. ii.
* Delft University of Technology, The Netherlands.
† Sandia National Laboratories, Albuquerque, USA.

the tunnel to the weight of the soil, is assumed to range between 0 and 1. This leads to an upward force of magnitude $F = (1 - w_t)\gamma\pi r^2$ per unit thickness of the plane. The tunnel radius also shrinks by an amount w, a uniform radial displacement, in the inward direction. The problem is to determine the deformations and incremental stresses caused by the radial displacement w of the tunnel circumference (ground loss) and the buoyant force F (the buoyancy effect). It is possible to include deformation of the liner, such as ovalisation (Strack, 2002), in the solution, but such effects are omitted here.

The problem can be solved analytically using the complex variable method (Muskhelishvili, 1953). In this method the half-plane with a circular hole is mapped conformally onto the interior of a ring bounded by a unit circle and a smaller concentric circle. The problem is described by two complex potentials, which can be written in the form of Laurent series, convergent in the circular ring. The coefficients in these series can be determined from the boundary conditions at infinity, at the free surface, and at the cavity boundary. This leads to a closed-form solution for both complex potentials in the form of two infinite power series in the plane of the conformal mapping (Verruijt, 1997; Strack, 2002; Strack & Verruijt, 2002). From these complex potentials the displacements and the stresses can be determined by differentiation. Numerical results can be obtained, to an arbitrary degree of accuracy, by a relatively simple computer program, using complex variable analysis. An early form of this complex variable method was developed by Jeffery (1920) and Mindlin (1940) for some other problems of an elastic half-plane with a circular hole, on the basis of bipolar coordinates, although this simpler method yields the stresses only, and not the displacements.

Details of the solution of the problem of simultaneous buoyancy and ground loss will not be repeated here (see Strack, 2002), but some data will be presented to illustrate the effect of buoyancy. The buoyancy part of the solution is characterised by the relative weight of the tunnel, w_t, and the ground loss part of the solution is characterised by the relative radial displacement at the tunnel boundary, w/h. The relative influence of the two phenomena is characterised by the additional parameter $G/\gamma h$, the relative stiffness of the material. If $G/\gamma h$ is very large, the buoyancy effect is small, because then the soil is relatively stiff. If $G/\gamma h$ is very small, the buoyancy effect will dominate the solution, because then the relatively soft soil will respond to the buoyancy force with large deformations.

In the ground loss problem (Verruijt, 1997) the boundary condition at the tunnel boundary is a given uniform radial displacement, in the inward direction. It appears from the solution for the displacement field that this allows for an arbitrary constant to be added. This constant may for instance be determined by requiring that the displacement at infinity be zero. The consequence of this is that the tunnel undergoes a uniform downward displacement. This property can be imagined to be the result of the fact that there is much more material below the tunnel than above it, with a free surface, so that it is easier for the crest of the tunnel to subside than for its bottom to move up. In this solution the resulting force of the stresses integrated along the tunnel boundary is zero.

The solution of the buoyancy problem includes a logarithmic singularity in the displacements at infinity, a consequence of the fact that there is a non-zero net force at the tunnel boundary. The lack of constraint of the displacements at infinity can be remedied by requiring that the displacements of some other point in the plane be zero. In the present paper it has been assumed that the vertical displacement at the surface at a distance $5h$ from the central axis is zero, and that the horizontal displacements are symmetric. This last assumption seems very natural, but the assumption about the vertical displacement is somewhat arbitrary. A consequence is that the points at very large distances, including the point at infinity, displace in a downward direction rather than in an upward direction. One reason why these displacements do not occur in practice is that, no matter how long a tunnel is and how valid the plane-strain assumption may be, at large scales three-dimensional geometrical effects cause the displacements to tend towards zero. An additional, and important, reason for the dissipation of the displacements in practice is that soil appears to be stiffer for small strains (Atkinson, 2000), effectively localising the buoyancy effect. The singular behaviour discussed above is inherent to all two-dimensional elasticity solutions for problems with a non-zero resultant force.

EXAMPLES

The combined complex variable solution of the ground loss problem and the buoyancy problem has been implemented in a computer program called CircularTunnel.exe, which has been used to generate the results in this section (the program, together with some other applications of the complex variable method for tunnelling problems, can be downloaded from the internet at http://geo.verruijt.net).

The effect of buoyancy is illustrated in Fig. 2, which shows the displacement field for the case where $\nu = 0$, $w/h = 0{\cdot}01$, $G/\gamma h = 50$, for two values of the buoyancy effect. In the left half of the figure the buoyancy effect has been excluded by taking $w_t = 1$, which means that the weight of the tunnel is precisely equal to the weight of the excavated soil, and in the right half of the figure $w_t = 0{\cdot}25$, indicating that the weight of the tunnel is only 25% of the weight of the excavated tunnel. It appears that the subsidence is then reduced, as can be expected as a result of the upward force, but it also seems that the displacement trough is narrower. The displacements have been multiplied by a factor of 10 to improve the clarity of the figure.

Figure 3 shows the results for the case $\nu = 0{\cdot}5$, $w/h = 0{\cdot}01$, $G/\gamma h = 50$, and the same two cases of relative tunnel weight (100% and 25%). This case represents an incompressible material (for instance soft clay). Again the buoyancy effect appears to reduce the subsidence (as expected), and the subsidence trough seems to be narrower.

To study the effect of buoyancy on the width of the subsidence trough in more detail, output results of the vertical displacements of the surface can be represented in a relative form, using the maximum subsidence (above the centre of the tunnel) as a scaling factor. These results are shown in Fig. 4, for the case that $\nu = 0$, $w/h = 0{\cdot}01$, $G/\gamma h = 50$. The dashed line represents the surface displacements for the ground loss case alone, ignoring buoyancy, or, in

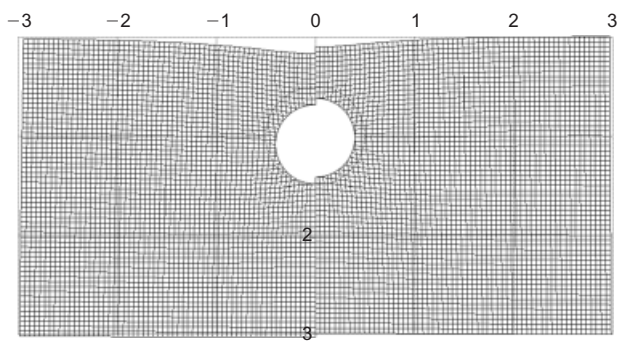

Fig. 2. Displacements for $\nu = 0$, $w/h = 0{\cdot}01$, $G/\gamma h = 50$, without and with buoyancy

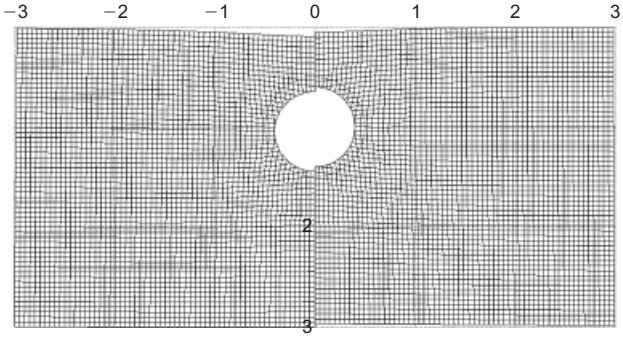

Fig. 3. Displacements for $\nu = 0{\cdot}5$, $w/h = 0{\cdot}01$, $G/\gamma h = 50$, without and with buoyancy

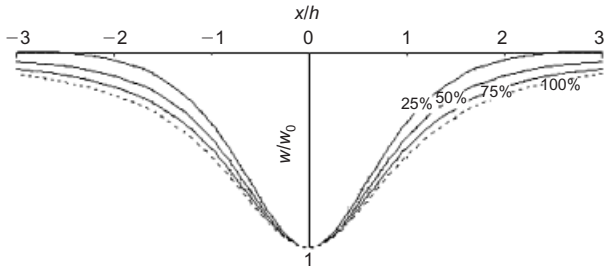

Fig. 4. Surface displacements, for various values of the relative weight of the tunnel

other words, the case of a tunnel having a weight precisely equal to the weight of the excavated soil. The solid lines represent the surface displacements for the case of ground loss plus buoyancy, for tunnels having a weight equal to 75%, 50% or 25% of the weight of the excavated soil. It appears that the subsidence trough is indeed narrower if the tunnel is lighter. For other values of Poisson's ratio the curves are practically the same, although the absolute values of the displacement then are different, as is also evident when comparing Figs 2 and 3.

The surface displacements are also smaller if the tunnel is lighter, but this cannot be seen in Fig. 4, where only relative displacements are shown.

CONCLUSIONS

It has been shown that the surface deformations above a bored tunnel are influenced by the buoyancy effect of a tunnel that is lighter than the excavated soil, if the soil is considered as a homogeneous isotropic linear elastic material. Not only is the subsidence smaller if the tunnel is lighter, but the subsidence trough is also narrower than in the case of elastic ground loss only, as is often observed in tunnelling practice.

Although other effects may play a role in determining the shape of the subsidence curve, the buoyancy effect is large enough relative to the settlements due to ground loss to recommend including the effect when determining settlements due to tunnel excavations.

ACKNOWLEDGEMENT

Sandia is a multi-programme laboratory operated by the Sandia Corporation, a Lockheed Martin Company, for the United States Department of Energy's National Nuclear Security Administration under contract DE-AC04-94AL85000.

REFERENCES

Atkinson, J. H. (2000). Non-linear stiffness in routine design. *Géotechnique* **50**, No. 5, 487–508.

Brinkgreve, R. B. J., Bakker, K. J. & Bonnier, P. G. (2006). The relevance of small-strain soil stiffness in numerical simulation of excavation and tunnelling projects. In *Numerical methods in geotechnical engineering* (ed. H. F. Schweiger), pp. 133–139. London: Taylor & Francis Group.

Jeffery, G. B. (1920). Plane stress and plane strain in bipolar coordinates. *Trans. R. Soc. London Ser. A* **221**, 265–293.

Loganathan, N. & Poulos, H. G. (1998). Analytical prediction for tunneling-induced ground movements in clays. *ASCE J. Geotech. Geoenviron. Engng* **124**, No. 9, 846–856.

Mindlin, R. D. (1940). Stress distribution around a tunnel. *Trans. ASCE* **105**, 1117–1153.

Muskhelishvili, N. I. (1953). *Some basic problems of the mathematical theory of elasticity* (transl. J. R. M. Radok). Groningen: Noordhoff.

Osman, A. S., Bolton, M. D. & Mair, R. J. (2006). Predicting 2D ground movements around tunnels in undrained clay. *Géotechnique* **56**, No. 9, 597–604.

Peck, R. B. (1969). Deep excavation and tunneling in soft ground, state of the art report. *Proc. 7th Int. Conf. Soil Mech. Found. Engng, Mexico City*, 225–290.

Sagaseta, C. (1987). Analysis of undrained soil deformation due to ground loss. *Géotechnique* **37**, No. 3, 301–320.

Strack, O. E. (2002). *Analytic solutions of elastic tunnelling problems*. PhD thesis, Delft University of Technology (available at http://www.library.tudelft.nl/ws/search/publications/index.htm.

Strack, O. E. & Verruijt, A. (2002). A complex variable solution for a deforming buoyant tunnel in a heavy elastic half-plane. *Int. J. Numer. Anal. Methods Geomech.* **26**, No. 12, 1235–1252.

Van Jaarsveld, E. P., Plekkenpol, J. W. & Messemaeckers van de Graaf, C. A. (1999). Ground deformations due to the boring of the second Heinenoord tunnel. *Proc. 12th Eur. Conf. Soil Mech. Geotech. Engng, Amsterdam* **1,** 153–159.

Verruijt, A. & Booker, J. R. (1996). Surface settlements due to deformation of a tunnel in an elastic half plane. *Géotechnique* **46**, No. 4, 753–756.

Verruijt, A. (1997). A complex variable solution for a deforming circular tunnel in an elastic half plane. *Int. J. Numer. Anal. Methods Geomech.* **21**, No. 2, 77–89.