COMPLEX VARIABLE SOLUTIONS OF ELASTIC TUNNELING PROBLEMS

A. Verruijt

Delft University of Technology

August 1996, September 2009

1. Introduction

In this report it is investigated whether certain problems of stresses and deformations caused by deformation of a tunnel in an elastic half plane can be solved by the complex variable method, as described by Muskhelishvili (1953). The geometry of the problems is that of a half plane with a circular cavity, see figure 1.1. The boundary conditions are that the upper boundary of the half plane is free of stress,

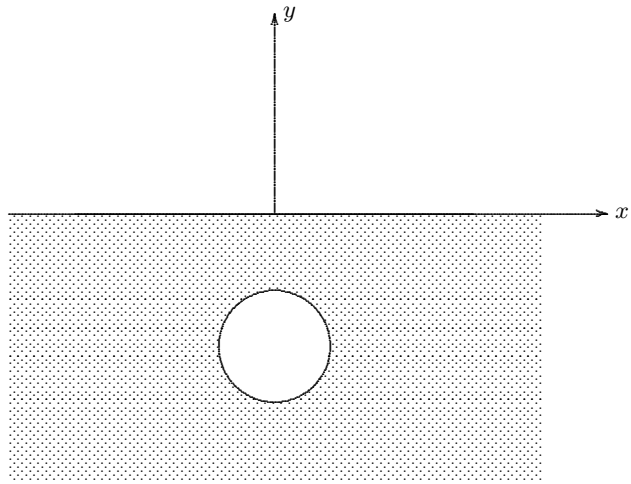

Figure 1.1. Half plane with circular cavity

and that the boundary of the cavity undergoes a certain prescribed displacement, for instance a uniform radial displacement (the ground loss problem) or an ovalisation.

In the chapters 2 – 6 of this report the complex variable method for the solution of elasticity problems is recapitulated, and some simple examples are elaborated. These include problems for a continuous half plane and problems for a circular ring. By combining the techniques used in these chapters the actual problem of the half plane with a circular cavity can be solved, starting in chapter 7. Chapter 7 describes some properties of the conformal transformation. Chapter 8 contains the main derivations of the complex equations appearing in the boundary conditions. In this chapter the consequences of the stress-free boundary at the ground surface are investigated, and the basic equations are given for the case that the stresses are prescribed at the boundary of the circular cavity. In chapter 9 the problem for the case of a prescribed displacement at the boundary of the circular cavity is solved. This solution is elaborated in chapter 10. A computer program to validate the solution is decsribed in chapter 11.

It should be noted that in the classical treatises of Muskhelishvili (1953) and Sokolnikoff (1956) on the complex variable method in elasticity, the problems studied here are briefly mentioned, but it is stated that "difficulties" arise in the solution of these problems, and it is suggested to use another method of solution, such as the method using bipolar coordinates. It is the purpose of this report to show that these "difficulties" can be surmounted.

In this report two elementary problems are considered in detail. These are the problem of a halfplane with a circular cavity loaded by a uniform radial stress, and the problem in which a uniform radial displacement is imposed on the cavity boundary (this is usually called the ground loss problem). In a later report it is planned to consider Mindlin's problem of a circular cavity in an elastic half plane loaded by gravity.

The results of the calculations are shown in graphical form in chapters 10 and 13, which may be of particular interest for tunnel engineering. These results are also available in the form of two computer programs (Jeffery.exe and GroundLoss.exe), which will show numerical or graphical results. These programs may be downloaded from the author's website http://geo.verruijt.net.

The contents of this report form the background material of two papers on the same subject (Verruijt, 1997; Verruijt, 1998).

References

H. Bateman, *Tables of Integral Transforms*, 2 vols., McGraw-Hill, New York, 1954.

E.G. Coker and L.N.G. Filon, *Photoelasticity*, University Press, Cambridge, 1931.

L.N.G. Filon, On a quadrature formula for trigonometric integrals, *Proc. Roy. Soc. Edinburgh*, **45**, 356-366, 1966.

A.E. Green and W. Zerna, *Theoretical Elasticity*, Clarendon Press, Oxford, 1954.

W. Gröbner and N. Hofreiter, *Integraltafel*, Springer, Wien, 1961.

G.B. Jeffery, Plane stress and plane strain in bipolar coordinates, *Trans. Royal Soc.*, series A, **221**, 265-293, 1920.

G.A. Korn and T.M. Korn, *Mathematical Handbook for Scientists and Engineers*, 2nd ed., McGraw-Hill, New York, 1968.

E. Melan, Der Spannungszustand der durch eine Einzelkraft im Innern beanspruchten Halbscheibe, *ZAMM*, **12**, 343-346, 1932.

R.D. Mindlin, Stress distribution around a tunnel, *Trans. ASCE*, 1117-1153, 1940.

N.I. Muskhelishvili, *Some Basic Problems of the Mathematical Theory of Elasticity*, translated from the Russian by J.R.M. Radok, Noordhoff, Groningen, 1953.

C. Sagaseta, Analysis of undrained deformation due to ground loss, *Géotechnique* **37**, 301-320, 1987.

I.N. Sneddon, *Fourier Transforms*, McGraw-Hill, New York, 1951.

I.S. Sokolnikoff, *Mathematical Theory of Elasticity*, 2nd ed., McGraw-Hill, New York, 1956.

S.P. Timoshenko and J.N. Goodier, *Theory of Elasticity*, 2nd ed., McGraw-Hill, New York, 1951.

A. Verruijt, *Stresses due to Gravity in an Elastic Half-plane with Notches or Mounds*, Ph.D. Thesis Delft, Van Soest, Amsterdam, 1969.

A. Verruijt, A complex variable solution for a deforming circular tunnel in an elastic half-plane, *Int. J. Numer. and Anal. Methods in Geomechanics*, **21**, 77-89, 1997.

A. Verruijt, Deformations of an elastic half-plane with a circular cavity, *Int. J. Solids Structures*, **21**, 2795-2804, 1998.

A. Verruijt and J.R. Booker, Surface settlements due to ground loss and ovalisation of a tunnel, *Géotechnique*, **46**, 753-756, 1996.

2. Basic equations

In this chapter the basic equations of plane strain elasticity theory are presented, using the complex variable approach (Muskhelishvili, 1953).

2.1 Plane strain elasticity

Consider a homogeneous linear elastic material, deforming under plane strain conditions. In the absence of body forces the equations of equilibrium are

$$\frac{\partial \sigma_{xx}}{\partial x} + \frac{\partial \sigma_{yx}}{\partial y} = 0, \tag{2.1}$$

$$\frac{\partial \sigma_{xy}}{\partial x} + \frac{\partial \sigma_{yy}}{\partial y} = 0. \tag{2.2}$$

The stresses can be expressed in the displacements by Hooke's law,

$$\sigma_{xx} = 2\mu \frac{\partial u_x}{\partial x} + \lambda\big(\frac{\partial u_x}{\partial x} + \frac{\partial u_y}{\partial y}\big), \tag{2.3}$$

$$\sigma_{yy} = 2\mu \frac{\partial u_y}{\partial y} + \lambda\big(\frac{\partial u_x}{\partial x} + \frac{\partial u_y}{\partial y}\big), \tag{2.4}$$

$$\sigma_{xy} = \sigma_{yx} = \mu\big(\frac{\partial u_x}{\partial y} + \frac{\partial u_y}{\partial x}\big). \tag{2.5}$$

Substitution of eqs. (2.3) – (2.5) into the equations of equilibrium (2.1) and (2.2) gives

$$\mu \nabla^2 u_x + (\lambda + \mu)\frac{\partial}{\partial x}\big(\frac{\partial u_x}{\partial x} + \frac{\partial u_y}{\partial y}\big) = 0, \tag{2.6}$$

$$\mu \nabla^2 u_y + (\lambda + \mu)\frac{\partial}{\partial y}\big(\frac{\partial u_x}{\partial x} + \frac{\partial u_y}{\partial y}\big) = 0. \tag{2.7}$$

These are the equations of equilibrium in terms of the displacements.

It follows from (2.6) and (2.7) that

$$\nabla^2\big(\frac{\partial u_x}{\partial x} + \frac{\partial u_y}{\partial y}\big) = 0. \tag{2.8}$$

Furthermore it follows from (2.3) and (2.4) that

$$\sigma_{xx} + \sigma_{yy} = 2(\lambda + \mu)\big(\frac{\partial u_x}{\partial x} + \frac{\partial u_y}{\partial y}\big). \tag{2.9}$$

Thus it follows that

$$\nabla^2(\sigma_{xx} + \sigma_{yy}) = 0. \tag{2.10}$$

2.2 Airy's function

It follows from (2.1) that there must exist a single-valued function $B(x, y)$ such that

$$\sigma_{xx} = \frac{\partial B}{\partial y}, \qquad \sigma_{yx} = -\frac{\partial B}{\partial x}. \tag{2.11}$$

Similarly, it follows from (2.2) that there must exist a single-valued function $A(x, y)$ such that

$$\sigma_{xy} = -\frac{\partial A}{\partial y}, \qquad \sigma_{yy} = \frac{\partial A}{\partial x}. \tag{2.12}$$

Because $\sigma_{xy} = \sigma_{yx}$ it follows that

$$\frac{\partial B}{\partial x} = \frac{\partial A}{\partial y}. \tag{2.13}$$

This means that there must exist a single-valued function U such that

$$A = \frac{\partial U}{\partial x}, \qquad B = \frac{\partial U}{\partial y}. \tag{2.14}$$

The stresses can be expressed in the function U, Airy's stress function, by the relations

$$\sigma_{xx} = \frac{\partial^2 U}{\partial y^2}, \qquad \sigma_{yx} = -\frac{\partial^2 U}{\partial xy}, \qquad \sigma_{yy} = \frac{\partial^2 U}{\partial x^2}. \tag{2.15}$$

With (2.10) it follows that Airy's function must be biharmonic,

$$\nabla^2 \nabla^2 U = 0. \tag{2.16}$$

In the next section a general form of the solution will be derived, in terms of complex functions.

2.3 The Goursat solution

In order to solve eq. (2.16) we write

$$\nabla^2 U = P. \tag{2.17}$$

Because U is biharmonic the function P must be harmonic,

$$\nabla^2 P = 0. \tag{2.18}$$

The general solution of eq. (2.18) in terms of an analytic function is

$$P = \mathrm{Re}\{f(z)\}, \tag{2.19}$$

where f is an analytic function of the complex variable $z = x + iy$. We will write

$$Q = \mathrm{Im}\{f(z)\}, \tag{2.20}$$

so that

$$f(z) = P + iQ. \tag{2.21}$$

Because $f(z)$ is analytic it follows that the functions P and Q satisfy the Cauchy-Riemann conditions,

$$\frac{\partial P}{\partial x} = \frac{\partial Q}{\partial y}, \qquad \frac{\partial P}{\partial y} = -\frac{\partial Q}{\partial x}. \tag{2.22}$$

A function $\phi(z)$ is introduced as the integral of $f(z)$, apart from a factor 4, so that

$$\frac{d\phi}{dz} = \tfrac{1}{4} f(z). \tag{2.23}$$

The function $\phi(z)$ is also an analytic function of z. If we write

$$\phi(z) = p + iq, \tag{2.24}$$

it follows that

$$\frac{d\phi}{dz} = \frac{\partial p}{\partial x} + i\frac{\partial q}{\partial x} = \tfrac{1}{4} f(z) = \tfrac{1}{4} P + \tfrac{1}{4} iQ. \tag{2.25}$$

Thus, using the Cauchy-Riemann conditions for p and q,

$$\frac{\partial p}{\partial x} = \frac{\partial q}{\partial y} = \tfrac{1}{4} P, \qquad \frac{\partial p}{\partial y} = -\frac{\partial q}{\partial x} = -\tfrac{1}{4} Q. \tag{2.26}$$

We now consider the function

$$F = U - \tfrac{1}{2}\overline{z}\phi(z) - \tfrac{1}{2}z\overline{\phi(z)}, \tag{2.27}$$

or

$$F = U - \tfrac{1}{2}(x - iy)(p + iq) - \tfrac{1}{2}(x + iy)(p - iq) = U - xp - yq. \tag{2.28}$$

Taking the Laplacian of this expression gives

$$\nabla^2 F = \nabla^2 U - x\nabla^2 p - y\nabla^2 q - 2\frac{\partial p}{\partial x} - 2\frac{\partial q}{\partial y}. \tag{2.29}$$

Because p and q are the real and imaginary parts of an analytic function their Laplacian is zero. Thus, using (2.26),

$$\nabla^2 F = \nabla^2 U - P. \tag{2.30}$$

Finally, using (2.17) it follows that the Laplacian of F is zero,

$$\nabla^2 F = 0. \tag{2.31}$$

This means that we may write

$$F = \mathrm{Re}\{\chi(z)\} = \tfrac{1}{2}\{\chi(z) + \overline{\chi(z)}\}, \tag{2.32}$$

where $\chi(z)$ is another analytic function of z. The imaginary part of $\chi(z)$ will be denoted by G, so that

$$\chi(z) = F + iG. \tag{2.33}$$

From (2.27) and (2.32) it follows that

$$2U = \overline{z}\phi(z) + z\overline{\phi(z)} + \chi(z) + \overline{\chi(z)}, \tag{2.34}$$

or

$$U = \mathrm{Re}\{\overline{z}\phi(z) + \chi(z)\}. \tag{2.35}$$

This is the general solution of the biharmonic equation, first given by Goursat. In the next sections the stresses and the displacements will be expressed into the two functions $\phi(z)$ and $\chi(z)$.

2.4 Stresses

The stresses are expressed in the second derivatives of Airy's function U. First the first order derivative of U will be determined. The starting point is equation (2.28), in the form

$$U = F + xp + yq. \tag{2.36}$$

Here F, p and q are harmonic functions, and p and q are complex conjugates. Partial differentiation gives

$$\frac{\partial U}{\partial x} + i\frac{\partial U}{\partial y} = \frac{\partial F}{\partial x} + i\frac{\partial F}{\partial y} + p + iq + x\Big(\frac{\partial p}{\partial x} + i\frac{\partial p}{\partial y}\Big) + iy\Big(\frac{\partial q}{\partial y} - i\frac{\partial q}{\partial x}\Big). \tag{2.37}$$

The first two terms in the right hand side of eq. (2.37) can be expressed in the function $\chi(z)$ by noting that

$$\frac{d\chi}{dz} = \frac{\partial F}{\partial x} + i\frac{\partial G}{\partial x} = \frac{\partial F}{\partial x} - i\frac{\partial F}{\partial y}, \tag{2.38}$$

so that

$$\frac{\partial F}{\partial x} + i\frac{\partial F}{\partial y} = \overline{\psi(z)}, \tag{2.39}$$

where

$$\psi(z) = \frac{d\chi(z)}{dz}. \tag{2.40}$$

The third and fourth terms in the right hand side of eq. (2.37) together just form the function $\phi(z)$, see (2.24).

The last terms in the right hand side of eq. (2.37) can be expressed in the function $\phi(z)$ by noting that

$$\frac{d\phi}{dz} = \frac{\partial p}{\partial x} + i\frac{\partial q}{\partial x} = \frac{\partial p}{\partial x} - i\frac{\partial p}{\partial y}, \tag{2.41}$$

or

$$\frac{d\phi}{dz} = \frac{\partial q}{\partial y} + i\frac{\partial q}{\partial x} = \frac{\partial q}{\partial y} - i\frac{\partial p}{\partial y}. \tag{2.42}$$

From these equations it follows that

$$z\overline{\phi'(z)} = x(\frac{\partial p}{\partial x} + i\frac{\partial p}{\partial y}) + iy(\frac{\partial q}{\partial y} - i\frac{\partial q}{\partial x}). \tag{2.43}$$

All this means that eq. (2.37) can be written as

$$\frac{\partial U}{\partial x} + i\frac{\partial U}{\partial y} = \phi(z) + z\overline{\phi'(z)} + \overline{\psi(z)}. \tag{2.44}$$

In order to obtain expressions for the second order derivatives of U, the quantity $\partial U/\partial x + i\partial U/\partial y$ is differentiated with respect to x and y. First differentiation of eq. (2.37) with respect to x gives

$$\begin{aligned}\frac{\partial^2 U}{\partial x^2} + i\frac{\partial^2 U}{\partial y\partial x} = \frac{\partial^2 F}{\partial x^2} + i\frac{\partial^2 F}{\partial y\partial x} + (\frac{\partial p}{\partial x} + i\frac{\partial q}{\partial x}) + (\frac{\partial p}{\partial x} + i\frac{\partial p}{\partial y}) \\ +x(\frac{\partial^2 p}{\partial x^2} + i\frac{\partial^2 p}{\partial y\partial x}) + iy(\frac{\partial^2 q}{\partial y\partial x} - i\frac{\partial^2 q}{\partial x^2}).\end{aligned} \tag{2.45}$$

Secondly, differentiation of eq. (2.37) with respect to y gives, after multiplication by $-i$,

$$\begin{aligned}\frac{\partial^2 U}{\partial y^2} - i\frac{\partial^2 U}{\partial x\partial y} = \frac{\partial^2 F}{\partial y^2} - i\frac{\partial^2 F}{\partial x\partial y} + (\frac{\partial q}{\partial y} - i\frac{\partial p}{\partial y}) + (\frac{\partial q}{\partial y} - i\frac{\partial q}{\partial x}) \\ +x(\frac{\partial^2 p}{\partial y^2} - i\frac{\partial^2 p}{\partial x\partial y}) - iy(\frac{\partial^2 q}{\partial x\partial y} + i\frac{\partial^2 q}{\partial y^2}).\end{aligned} \tag{2.46}$$

In these equations the first two terms can be expressed into the second derivative of χ, that is the first derivative of ψ, by noting that

$$\frac{d^2\chi}{dz^2} = \frac{d\psi}{dz} = \frac{\partial^2 F}{\partial x^2} - i\frac{\partial^2 F}{\partial x\partial y} = -\frac{\partial^2 F}{\partial y^2} - i\frac{\partial^2 F}{\partial x\partial y}, \tag{2.47}$$

so that

$$\frac{\partial^2 F}{\partial x^2} + i\frac{\partial^2 F}{\partial x\partial y} = \overline{\psi'(z)}, \tag{2.48}$$

and

$$\frac{\partial^2 F}{\partial y^2} - i\frac{\partial^2 F}{\partial x\partial y} = -\overline{\psi'(z)}, \tag{2.49}$$

The terms 3–6 in eqs. (2.45) and (2.46) add up to $2\partial p/\partial x$, respectively $2\partial q/\partial y$ because $\partial p/\partial y = -\partial q/\partial x$, and using (2.41) and (2.42) these can be written as

$$2\frac{\partial p}{\partial x} = 2\frac{\partial q}{\partial y} = \phi'(z) + \overline{\phi'(z)}. \tag{2.50}$$

Finally the last terms in eqs. (2.45) and (2.46) can be expressed into the second derivative of ϕ by noting that it follows from differentiation of (2.41) or (2.42) that

$$\frac{d^2\phi}{dz^2} = \frac{\partial^2 p}{\partial x^2} - i\frac{\partial^2 p}{\partial x \partial y} = \frac{\partial^2 q}{\partial x \partial y} + i\frac{\partial^2 q}{\partial x^2}, \tag{2.51}$$

or

$$\frac{d^2\phi}{dz^2} = -\frac{\partial^2 p}{\partial y^2} - i\frac{\partial^2 p}{\partial x \partial y} = \frac{\partial^2 q}{\partial x \partial y} - i\frac{\partial^2 q}{\partial y^2}. \tag{2.52}$$

From these equations it follows that

$$z\overline{\phi''(z)} = x\big(\frac{\partial^2 p}{\partial x^2} + i\frac{\partial^2 p}{\partial x \partial y}\big) + iy\big(\frac{\partial^2 q}{\partial x \partial y} - i\frac{\partial^2 q}{\partial x^2}\big), \tag{2.53}$$

and

$$z\overline{\phi''(z)} = -x\big(\frac{\partial^2 p}{\partial y^2} - i\frac{\partial^2 p}{\partial x \partial y}\big) + iy\big(\frac{\partial^2 q}{\partial x \partial y} + i\frac{\partial^2 q}{\partial y^2}\big), \tag{2.54}$$

Substitution of all these results into (2.45) and (2.46) gives, finally,

$$\frac{\partial^2 U}{\partial x^2} + i\frac{\partial^2 U}{\partial y \partial x} = z\overline{\phi''(z)} + \phi'(z) + \overline{\phi'(z)} + \overline{\psi'(z)}, \tag{2.55}$$

and

$$\frac{\partial^2 U}{\partial y^2} - i\frac{\partial^2 U}{\partial x \partial y} = -z\overline{\phi''(z)} + \phi'(z) + \overline{\phi'(z)} - \overline{\psi'(z)}, \tag{2.56}$$

It follows, finally, by using the expressions for the stresses in terms of Airy's function, and by adding and subtracting the two equations (2.55) and (2.56), that

$$\sigma_{xx} + \sigma_{yy} = 2\{\phi'(z) + \overline{\phi'(z)}\}, \tag{2.57}$$

$$\sigma_{yy} - \sigma_{xx} + 2i\sigma_{xy} = 2\{\overline{z}\phi''(z) + \psi'(z)\}. \tag{2.58}$$

These are the equations of Kolosov-Muskhelishvili.

2.5 Displacements

In order to express the displacement components into the complex functions ϕ and ψ we start with the basic equations expressing the stresses into the displacements, see (2.3) and (2.4),

$$\sigma_{xx} = 2\mu\frac{\partial u_x}{\partial x} + \lambda\big(\frac{\partial u_x}{\partial x} + \frac{\partial u_y}{\partial y}\big), \tag{2.59}$$

$$\sigma_{yy} = 2\mu\frac{\partial u_y}{\partial y} + \lambda\big(\frac{\partial u_x}{\partial x} + \frac{\partial u_y}{\partial y}\big), \tag{2.60}$$

Addition of these two equations gives

$$\sigma_{xx} + \sigma_{yy} = 2(\lambda + \mu)\big(\frac{\partial u_x}{\partial x} + \frac{\partial u_y}{\partial y}\big). \tag{2.61}$$

With (2.15) and (2.17) we have

$$\sigma_{xx} + \sigma_{yy} = \nabla^2 U = P, \tag{2.62}$$

so that we may write

$$2\mu\frac{\partial u_x}{\partial x} = \frac{\partial^2 U}{\partial y^2} - \frac{\lambda}{2(\lambda + \mu)}P, \tag{2.63}$$

$$2\mu\frac{\partial u_y}{\partial y} = \frac{\partial^2 U}{\partial x^2} - \frac{\lambda}{2(\lambda+\mu)}P. \tag{2.64}$$

Because $\nabla^2 U = P$ these equations may also be written as

$$2\mu\frac{\partial u_x}{\partial x} = -\frac{\partial^2 U}{\partial x^2} + \frac{\lambda+2\mu}{2(\lambda+\mu)}P, \tag{2.65}$$

$$2\mu\frac{\partial u_y}{\partial y} = -\frac{\partial^2 U}{\partial y^2} + \frac{\lambda+2\mu}{2(\lambda+\mu)}P. \tag{2.66}$$

According to (2.26) the quantity P may also be written as $4\partial p/\partial x$ or $4\partial q/\partial y$. This gives

$$2\mu\frac{\partial u_x}{\partial x} = -\frac{\partial^2 U}{\partial x^2} + \frac{2(\lambda+2\mu)}{\lambda+\mu}\frac{\partial p}{\partial x}, \tag{2.67}$$

$$2\mu\frac{\partial u_y}{\partial y} = -\frac{\partial^2 U}{\partial y^2} + \frac{2(\lambda+2\mu)}{\lambda+\mu}\frac{\partial q}{\partial y}. \tag{2.68}$$

The two equations have now been obtained in a form in which in the first equation all terms contain a partial derivative with respect to x, and in the second equation all terms contain a partial derivative with respect to y. Integration gives

$$2\mu u_x = -\frac{\partial U}{\partial x} + \frac{2(\lambda+2\mu)}{\lambda+\mu}p + f(y), \tag{2.69}$$

$$2\mu u_y = -\frac{\partial U}{\partial y} + \frac{2(\lambda+2\mu)}{\lambda+\mu}q + g(x), \tag{2.70}$$

where at this stage $f(y)$ and $g(x)$ are arbitrary functions. In order to further determine these functions we use the expressions for the shear stress σ_{xy}. Differentiation of (2.69) with respect to y, of (2.70) with respect to x, and addition of the results gives

$$2\mu\left(\frac{\partial u_x}{\partial y} + \frac{\partial u_y}{\partial x}\right) = -2\frac{\partial^2 U}{\partial x\partial y} + \frac{2(\lambda+2\mu)}{\lambda+\mu}\left(\frac{\partial p}{\partial y} + \frac{\partial q}{\partial x}\right) + \frac{df}{dy} + \frac{dg}{dx}. \tag{2.71}$$

Because p and q are complex conjugates it follows that $\partial p/\partial y + \partial q/\partial x = 0$. Furthermore it follows from (2.5) and (2.15) that

$$2\mu\left(\frac{\partial u_x}{\partial y} + \frac{\partial u_y}{\partial x}\right) = 2\sigma_{xy} = -2\frac{\partial^2 U}{\partial x\partial y}. \tag{2.72}$$

Comparison with (2.71) shows that

$$\frac{df}{dy} + \frac{dg}{dx} = 0. \tag{2.73}$$

The first term is a function of y only, and the second term is a function of x only. This means that the only possibility is that

$$\frac{df}{dy} = -\frac{dg}{dx} = -2\mu\varepsilon, \tag{2.74}$$

where ε is an arbitrary constant, and the factor -2μ has been included for future convenience.

It follows from (2.74) that

$$f = 2\mu(a - \varepsilon y), \qquad g = 2\mu(b + 2\mu\varepsilon), \tag{2.75}$$

where a and b are two more arbitrary constants.

Substitution of (2.75) into (2.69) and (2.70) gives

$$2\mu u_x = -\frac{\partial U}{\partial x} + \frac{2(\lambda+2\mu)}{\lambda+\mu}p + 2\mu(a - \varepsilon y), \tag{2.76}$$

$$2\mu u_y = -\frac{\partial U}{\partial y} + \frac{2(\lambda+2\mu)}{\lambda+\mu} q + 2\mu(b+\varepsilon x), \tag{2.77}$$

The last terms in these expressions represent a rigid body displacement, of magnitude a in x-direction, b in y-direction, and a rotation over an angle ε. If this is omitted, on the understanding that when necessary such a rigid body displacement can always be added to the displacement field, we may write

$$2\mu(u_x + iu_y) = -(\frac{\partial U}{\partial x} + i\frac{\partial U}{\partial y}) + \frac{2(\lambda+2\mu)}{\lambda+\mu}(p+iq). \tag{2.78}$$

The functions $p+iq$ together form $\phi(z)$, see (2.24). With (2.44) it finally follows that

$$2\mu(u_x + iu_y) = \kappa\phi(z) - z\overline{\phi'(z)} - \overline{\psi(z)}, \tag{2.79}$$

where

$$\kappa = \frac{\lambda+3\mu}{\lambda+\mu} = 3 - 4\nu. \tag{2.80}$$

Equation (2.79) was also derived first by Kolosov-Muskhelishvili.

It may be noted that for plane stress conditions the same equations apply, except that in that case the coefficient κ has a different value,

$$\kappa = \frac{5\lambda+6\mu}{3\lambda+2\mu} = \frac{3-\nu}{1+\nu}. \tag{2.81}$$

2.6 Boundary conditions

The solution of a certain problem is determined by the boundary conditions. These may refer to the displacements, or to the surface tractions. In the first case the boundary condition can easily be interpreted in terms of the quantity $u_x + iu_y$, as given by eq. (2.79). In the second case it is sometimes convenient to specify the boundary conditions in terms of $\sigma_{xx} - i\sigma_{xy}$ or in terms of $\sigma_{yy} + i\sigma_{yx}$, which can immediately be expressed in the stress functions $\phi(z)$ and $\psi(z)$ through the relations (2.57) and (2.58). This is especially convenient for horizontal and vertical boundaries. For straight boundaries under a constant angle it may be convenient to use the transformation formulas

$$u_{x'} + +iu_{y'} = (u_x + iu_y)\exp(-i\theta), \tag{2.82}$$

$$\sigma_{x'x'} + \sigma_{y'y'} = \sigma_{xx} + \sigma_{yy}, \tag{2.83}$$

$$\sigma_{y'y'} - \sigma_{x'x'} + 2i\sigma_{x'y'} = (\sigma_{yy} - \sigma_{xx} + 2i\sigma_{xy})\exp(2i\theta), \tag{2.84}$$

where θ is the angle over which the axes x and y must be rotated to coincide with x' and y'.

In the more general case of a curved boundary, see figure 2.1, it is more convenient to derive a formula in terms of the integral of the surface tractions. Let the boundary condition be that the surface tractions t_x and t_y are prescribed, as a function of a coordinate s along the boundary (such that the material is to the left). We may write

$$t_x = \sigma_{xx}\cos\alpha + \sigma_{yx}\sin\alpha, \tag{2.85}$$

$$t_y = \sigma_{xy}\cos\alpha + \sigma_{yy}\sin\alpha. \tag{2.86}$$

Because along the boundary $dy = ds\cos\alpha$ and $dx = -ds\sin\alpha$, and the stresses can be related to Airy's stress function U through the equations (2.15) it follows that

$$t_x = \frac{\partial^2 U}{\partial y^2}\frac{dy}{ds} + \frac{\partial^2 U}{\partial x\partial y}\frac{dx}{ds} = \frac{d}{ds}(\frac{\partial U}{\partial y}), \tag{2.87}$$

$$t_y = -\frac{\partial^2 U}{\partial x^2}\frac{dx}{ds} - \frac{\partial^2 U}{\partial x\partial y}\frac{dy}{ds} = -\frac{d}{ds}(\frac{\partial U}{\partial x}). \tag{2.88}$$

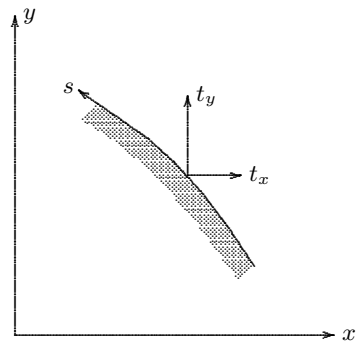

Figure 2.1. Boundary condition

These two equations can be combined into a complex equation

$$t_x + it_y = -i\frac{d}{ds}\left(\frac{\partial U}{\partial x} + i\frac{\partial U}{\partial y}\right). \tag{2.89}$$

If the boundary traction is integrated along the boundary, and this integral is defined as

$$F = F_1 + iF_2 = i\int_{s_0}^{s}(t_x + it_y)ds, \tag{2.90}$$

where s_0 is some arbitrary initial point on the boundary, then we may write

$$F_1 + iF_2 + C = \frac{\partial U}{\partial x} + i\frac{\partial U}{\partial y}, \tag{2.91}$$

where C is some arbitrary constant of integration. With (2.44) this gives, finally,

$$F_1 + iF_2 + C = \phi(z) + z\overline{\phi'(z)} + \overline{\psi(z)}. \tag{2.92}$$

This means that the integral of the surface tractions defines the combination of functions in the right hand side.

2.7 Recapitulation

The formulas can be recapitulated as follows. The solution can be expressed by two analytic functions $\phi(z)$ and $\psi(z)$. The stresses are related to these functions by the equations

$$\sigma_{xx} + \sigma_{yy} = 2\{\phi'(z) + \overline{\phi'(z)}\}, \tag{2.93}$$

$$\sigma_{yy} - \sigma_{xx} + 2i\sigma_{xy} = 2\{\overline{z}\phi''(z) + \psi'(z)\}. \tag{2.94}$$

The displacements are related to the analytic functions by the equation

$$2\mu(u_x + iu_y) = \kappa\phi(z) - z\overline{\phi'(z)} - \overline{\psi(z)}, \tag{2.95}$$

where for plane strain

$$\kappa = \frac{\lambda + 3\mu}{\lambda + \mu} = 3 - 4\nu. \tag{2.96}$$

and for plane stress

$$\kappa = \frac{5\lambda + 6\mu}{3\lambda + 2\mu} = \frac{3 - \nu}{1 + \nu}. \tag{2.97}$$

The integral of the surface tractions, integrated along the boundary, is related to the analytic functions by the equation

$$F_1 + iF_2 + C = \phi(z) + z\overline{\phi'(z)} + \overline{\psi(z)}. \tag{2.98}$$

The techniques to determine the complex functions $\phi(z)$ and $\psi(z)$ from the boundary conditions will be demonstrated in the next chapters.

The two basic problems of the mathematical theory of plane strain elasticity are that along the entire boundary either the surface tractions or the displacements are given. In the first case the function F is given along the boundary, and the functions $\phi(z)$ and $\psi(z)$ must be determined from (2.98). In the second case the function $\mu(u_x + iu_y$ is given along the boundary, and the functions $\phi(z)$ and $\psi(z)$ must be determined from (2.95). It may be noted that these equations are very similar (they differ only through the factor κ), so that the methods of solution may also be very similar.

It may also be noted that the addition of an arbitrary constant value to the two functions $\phi(z)$ and $\psi(z)$ does not affect the stresses, but leads to an additional homogeneous displacement. This may represent an arbitrary rigid body displacement of the field as a whole. In the case of a simply connected region, with a single boundary, with the surface tractions defined at the boundary (this is the first boundary value problem), the displacements are determined up to an arbitrary constant. The constant C in (2.98) then may be taken as zero, without loss of generality, and provided that it is remembered that a rigid body displacement can be added to the displacement field. In the case of a multiply connected region, when there are several disjoint boundary segments, the integration constant C may be taken equal to zero along one of the boundaries, but must be left as an unknown value on the remaining boundaries.

3. Solution of boundary value problems

In this chapter the general technique for the solution of boundary value problems for simply connected regions, in particular regions that can be mapped conformally onto a circle (such as a half plane) are discussed. In later chapters the theory will be applied to multiply connected regions, with circular boundaries (a ring) and to problems for the half plane with a circular hole. Many of the solutions have been presented also by Muskhelishvili (1953) and Sokolnikoff (1956).

3.1 Conformal mapping onto the unit circle

Suppose that we wish to solve a problem for an elastic body inside the region R in the complex z-plane. Let there be a conformal transformation of R onto the unit circle γ in the ζ-plane, denoted by

$$z = \omega(\zeta). \tag{3.1}$$

We now write

$$\phi(z) = \phi(\omega(\zeta)) = \phi_*(\zeta), \tag{3.2}$$

$$\psi(z) = \psi(\omega(\zeta)) = \psi_*(\zeta), \tag{3.3}$$

where the symbol $*$ indicates that the form of the function ϕ_* is different from that of the function ϕ. The derivative of ϕ is

$$\phi'(z) = \frac{d\phi}{dz} = \frac{d\phi}{d\zeta}\frac{d\zeta}{dz} = \frac{\phi_*'(\zeta)}{\omega'(\zeta)}. \tag{3.4}$$

3.2 Surface traction boundary conditions

If the points on the boundary in the ζ-plane are denoted by $\sigma = \exp(i\theta)$, the boundary condition for a problem with given surface tractions can be written as follows, starting from eq. (2.98),

$$F(\sigma) + C = \phi_*(\sigma) + \omega(\sigma)\frac{\overline{\phi_*'(\sigma)}}{\overline{\omega'(\sigma)}} + \overline{\psi_*(\sigma)}, \tag{3.5}$$

or, omitting the symbols $*$,

$$F(\sigma) + C = \phi(\sigma) + \frac{\omega(\sigma)}{\overline{\omega'(\sigma)}}\overline{\phi'(\sigma)} + \overline{\psi(\sigma)}. \tag{3.6}$$

It is now assumed that the integration constant $C = 0$, and that the boundary function $F(\sigma)$ can be represented by a Fourier series

$$F(\sigma) = F(\theta) = \sum_{k=-\infty}^{\infty} A_k \exp(ik\theta) = \sum_{k=-\infty}^{\infty} A_k \sigma^k, \tag{3.7}$$

where the coefficients A_k can be determined from the Fourier inversion theorem,

$$A_k = \frac{1}{2\pi}\int_0^{2\pi} F(\theta)\exp(-ik\theta)\,d\theta. \tag{3.8}$$

The functions $\phi(\zeta)$ and $\psi(\zeta)$ are analytic throughout the unit circle $|\zeta| \leq 1$, so that they may be expanded into Taylor series,

$$\phi(\zeta) = \sum_{k=1}^{\infty} a_k \zeta^k, \tag{3.9}$$

$$\psi(\zeta) = \sum_{k=0}^{\infty} b_k \zeta^k. \tag{3.10}$$

Here it has been assumed that $\phi(0) = 0$, which can be done without loss of generality, because it does not affect the stresses, and it has already been assumed that the displacements are determined apart from some arbitrary rigid body displacement.

The boundary condition can be written as

$$\sum_{k=-\infty}^{\infty} A_k \sigma^k = \sum_{k=1}^{\infty} a_k \sigma^k + \frac{\omega(\sigma)}{\overline{\omega'(\sigma)}} \sum_{k=1}^{\infty} k \overline{a}_k \sigma^{-k+1} + \sum_{k=0}^{\infty} \overline{b}_k \sigma^{-k}, \tag{3.11}$$

where it has been used that $\overline{\sigma} = \exp(-i\theta) = \sigma^{-1}$. The coefficients a_k and b_k have to be determined from this equation. The difficulties associated with this problem can best be investigated in successive steps, by considering various examples.

3.3 Displacement boundary conditions

As mentioned before the problem with given boundary values for the displacements is very similar to the problem with given surface tractions. Actually, if the displacements are given the basic equation is eq. (2.95). If the given quantity $2\mu(u_x + iu_y)$ along the boundary is denoted as $G(\sigma)$, and this is again represented by a Fourier series,

$$2\mu(u_x + iu_y) = G(\sigma) = \sum_{k=-\infty}^{\infty} B_k \sigma^k, \tag{3.12}$$

the system of equations will be, in analogy with (3.11),

$$\sum_{k=-\infty}^{\infty} B_k \sigma^k = \kappa \sum_{k=1}^{\infty} a_k \sigma^k - \frac{\omega(\sigma)}{\overline{\omega'(\sigma)}} \sum_{k=1}^{\infty} k \overline{a}_k \sigma^{-k+1} - \sum_{k=0}^{\infty} \overline{b}_k \sigma^{-k}. \tag{3.13}$$

The coefficients a_k and b_k must be determined from this equation.

4. Problems for a circular region

In this chapter some problems for a circular disk are discussed. This is the simplest possible type of problem.

For a circular region, of radius R, the mapping function is

$$z = \omega(\zeta) = R\zeta, \tag{4.1}$$

so that

$$\omega'(\zeta) = R. \tag{4.2}$$

In this case we have

$$\frac{\omega(\sigma)}{\overline{\omega'(\sigma)}} = \sigma, \tag{4.3}$$

4.1 Surface traction boundary conditions

If the surface tractions are given along the boundary, the boundary condition is

$$\sum_{k=-\infty}^{\infty} A_k\sigma^k = \sum_{k=1}^{\infty} a_k\sigma^k + \sum_{k=1}^{\infty} k\overline{a}_k\sigma^{-k+2} + \sum_{k=0}^{\infty} \overline{b}_k\sigma^{-k}, \tag{4.4}$$

or

$$\sum_{k=-\infty}^{\infty} A_k\sigma^k = \sum_{k=1}^{\infty} a_k\sigma^k + \sum_{k=-1}^{\infty} (k+2)\overline{a}_{k+2}\sigma^{-k} + \sum_{k=0}^{\infty} \overline{b}_k\sigma^{-k}, \tag{4.5}$$

or

$$\sum_{k=-\infty}^{\infty} A_k\sigma^k = \sum_{k=2}^{\infty} a_k\sigma^k + a_1\sigma + \overline{a}_1\sigma + \sum_{k=0}^{\infty} [\overline{b}_k + (k+2)\overline{a}_{k+2}]\sigma^{-k}. \tag{4.6}$$

In the right hand member the various terms have now been grouped together such that each term applies only to a single power of σ. By requiring that the coefficients of all powers of σ must be equal in the left and right hand members the coefficients can be solved successively, starting with large positive powers of σ, and then going down to large negative powers of σ. The result is

$$a_k = A_k, \quad k = 2, 3, 4, \ldots, \tag{4.7}$$

$$a_1 = \tfrac{1}{2}A_1, \tag{4.8}$$

$$b_k = \overline{A}_{-k} - (k+2)a_{k+2}, \quad k = 0, 1, 2, \ldots. \tag{4.9}$$

To derive eq. (4.8) it has been assumed that A_1 is real. This can be shown to be equivalent to the condition that the resulting moment on the body is zero. Furthermore the imaginary part of a_1 has been set equal to zero, for definiteness.

Equations (4.7)–(4.9) are also given by Sokolnikoff (1956), p. 281.

4.2 Displacement boundary conditions

For the second boundary value problem, with given displacements, the system of equations can be established in a similar way, starting from eq. (3.13). The result is

$$\sum_{k=-\infty}^{\infty} B_k\sigma^k = \kappa\sum_{k=2}^{\infty} a_k\sigma^k + \kappa a_1\sigma - \overline{a}_1\sigma - \sum_{k=0}^{\infty} [\overline{b}_k + (k+2)\overline{a}_{k+2}]\sigma^{-k}. \tag{4.10}$$

If the coefficients B_k are known, the coefficients a_k and b_k can be determined from this equation. In this case the solution is

$$a_k = \frac{B_k}{\kappa}, \quad k = 2, 3, 4, \ldots, \tag{4.11}$$

$$a_1 = \frac{\kappa B_1 + \overline{B}_1}{\kappa^2 - 1}, \tag{4.12}$$

$$b_k = -\overline{B}_{-k} - (k+2)a_{k+2}, \quad k = 0, 1, 2, \ldots. \tag{4.13}$$

4.3 Examples

4.3.1 Example 1: Uniform tension

As a first example consider the simple case of a circular region under uniform tension, see figure 4.1. This is a standard problem from the theory of elasticity. In this case the surface tractions are $t_x = t\cos\theta$ and

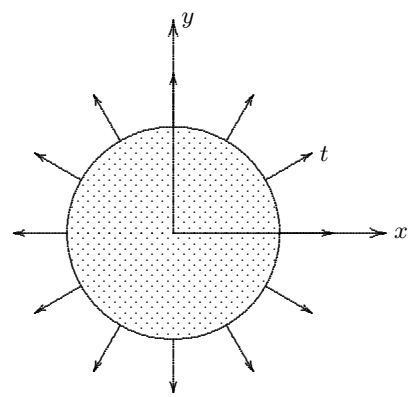

Figure 4.1. Circle under uniform tension

$t_y = t\sin\theta$, so that

$$F = i\int^{\theta} t\exp(i\theta)\,d\theta = tR\exp(i\theta), \tag{4.14}$$

or

$$F = tR\sigma. \tag{4.15}$$

An eventual constant integration factor has been omitted, on the understanding that this will only affect the value of $\psi(0)$, and can be incorporated into the rigid body displacement. The Fourier series representation of the function $F(\sigma)$ is very simple in this case,

$$A_1 = tR, \tag{4.16}$$

with all other coefficients A_k being zero.

We now obtain from eqs. (4.7)–(4.9)

$$a_k = 0, \quad k = 2, 3, 4, \ldots, \tag{4.17}$$

$$a_1 = \tfrac{1}{2}tR, \tag{4.18}$$

$$b_k = 0, \quad k = 0, 1, 2, \ldots. \tag{4.19}$$

Hence the functions $\phi(\zeta)$ and $\psi(\zeta)$ are

$$\phi(\zeta) = \tfrac{1}{2}tR\zeta, \tag{4.20}$$

$$\psi(\zeta) = 0. \tag{4.21}$$

Because $z = R\zeta$ it follows that

$$\phi(z) = \tfrac{1}{2}tz, \tag{4.22}$$

$$\psi(z) = 0. \tag{4.23}$$

The stresses are, with (2.93) and (2.94),

$$\sigma_{xx} + \sigma_{yy} = 2t, \tag{4.24}$$

$$\sigma_{yy} - \sigma_{xx} + 2i\sigma_{xy} = 0. \tag{4.25}$$

Hence

$$\sigma_{xx} = t, \qquad \sigma_{yy} = t, \qquad \sigma_{xy} = 0. \tag{4.26}$$

This is the correct solution of the problem, with a constant isotropic stress in the entire disk.

The displacements are, with (2.95),

$$2\mu(u_x + iu_y) = (1 - 2\nu)tz + \text{constant}. \tag{4.27}$$

The constant can be assumed to be zero, if the origin is assumed to be fixed. Thus

$$u_x = \frac{1 - 2\nu}{2\mu}tx, \tag{4.28}$$

$$u_y = \frac{1 - 2\nu}{2\mu}ty. \tag{4.29}$$

These are also well known formulas for the displacements in a disk under constant stress. It may be noted that the coefficient $2\mu/(1 - 2\nu)$ may also be written as $2(\lambda + \mu)$.

4.3.2 Example 2: Uniform stretching

As an alternative we may consider the case that the boundary of the circular region undergoes a uniform radial displacement. In this case the boundary condition is

$$z = R\exp(i\theta): \quad G = 2\mu(u_x + iu_y) = 2\mu u_0 \exp(i\theta), \tag{4.30}$$

or

$$G(\sigma) = 2\mu u_0 \sigma. \tag{4.31}$$

Equation (4.10) now gives

$$2\mu u_0 \sigma = \kappa \sum_{k=2}^{\infty} a_k \sigma^k + \kappa a_1 \sigma - \overline{a}_1 \sigma - \sum_{k=0}^{\infty} [\overline{b}_k + (k+2)\overline{a}_{k+2}]\sigma^{-k}. \tag{4.32}$$

Assuming that a_1 is real we now find that all coefficients are zero, except

$$a_1 = \frac{2\mu}{\kappa - 1}u_0 = (\lambda + \mu)u_0. \tag{4.33}$$

Hence

$$\phi(\zeta) = (\lambda + \mu)u_0\zeta, \tag{4.34}$$

or

$$\phi(z) = (\lambda + \mu)\frac{u_0}{R}z. \tag{4.35}$$

The other function is zero,

$$\psi(z) = 0. \tag{4.36}$$

The stresses are now found to be

$$\sigma_{xx} = \sigma_{yy} = 2(\lambda + \mu)\frac{u_0}{R}, \qquad \sigma_{xy} = 0. \tag{4.37}$$

This solution is in agreement with the previous one, and with the solution known from elementary elasticity theory.

5. Problems for a half plane

In this chapter elasticity problems for the half plane $\mathrm{Im}(z) \leq 0$ will be considered. The region R in the

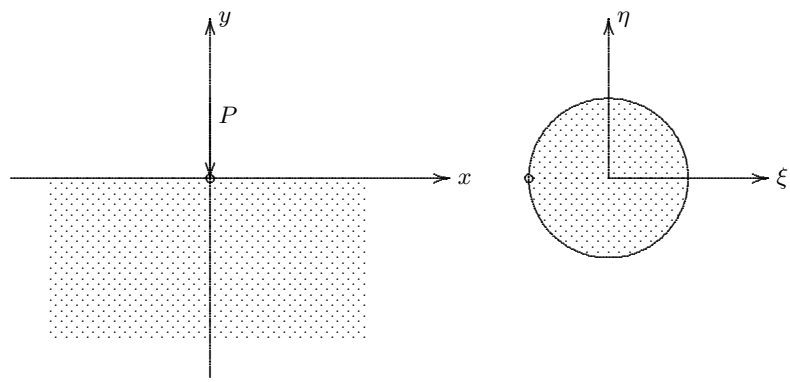

Figure 5.1. Mapping of half plane on unit circle

complex z-plane is mapped conformally onto the interior of the unit circle γ in the complex ζ-plane, see figure 5.1. In this case the conformal transformation is

$$z = \omega(\zeta) = -i\frac{1+\zeta}{1-\zeta}. \tag{5.1}$$

Differentiation with respect to ζ gives

$$\omega'(\zeta) = -\frac{2i}{(1-\zeta)^2}. \tag{5.2}$$

On the boundary $\zeta = \sigma$ and $\overline{\zeta} = \sigma^{-1}$. This gives

$$\frac{\omega(\sigma)}{\overline{\omega'(\sigma)}} = \tfrac{1}{2} - \tfrac{1}{2}\sigma^{-2}. \tag{5.3}$$

5.1 Surface traction boundary conditions

In this case the boundary condition (3.11) is

$$\sum_{k=-\infty}^{\infty} A_k\sigma^k = \sum_{k=1}^{\infty} a_k\sigma^k + \tfrac{1}{2}\sum_{k=1}^{\infty} k\overline{a}_k\sigma^{-k+1} - \tfrac{1}{2}\sum_{k=1}^{\infty} k\overline{a}_k\sigma^{-k-1} + \sum_{k=0}^{\infty} \overline{b}_k\sigma^{-k}. \tag{5.4}$$

This can also be written as

$$\sum_{k=-\infty}^{\infty} A_k\sigma^k = \sum_{k=1}^{\infty} a_k\sigma^k + (\overline{b}_0 + \tfrac{1}{2}\overline{a}_1) + (\overline{b}_1 + \overline{a}_2)\sigma^{-1} + \sum_{k=2}^{\infty}\Big[\overline{b}_k + \tfrac{1}{2}(k+1)\overline{a}_{k+1} - \tfrac{1}{2}(k-1)\overline{a}_{k-1}\Big]\sigma^{-k}. \tag{5.5}$$

Because now in both the left hand and the right hand members all terms have been arranged in powers of σ the coefficients a_k and b_k can be determined, successively. The solution of the system of equations is

$$a_k = A_k, \quad k = 1, 2, 3, \ldots, \tag{5.6}$$

$$b_0 = \overline{A}_0 - \tfrac{1}{2}a_1, \tag{5.7}$$

$$b_1 = \overline{A}_{-1} - a_2, \tag{5.8}$$

$$b_k = \overline{A}_{-k} - \tfrac{1}{2}(k+1)a_{k+1} + \tfrac{1}{2}(k-1)a_{k-1}, \quad k = 2, 3, 4, \ldots. \tag{5.9}$$

Actually, the expression (5.8) can also be covered by equation (5.9) if this is considered valid also for $k = 1$.

5.1.1 Example: Flamant's problem

As an example consider the problem of a concentrated point load on a half plane (Flamant's problem). In this case the surface $y = 0$ is free from stress, except at the origin, where a point load of magnitude P is applied, in negative y-direction, see figure 5.1. In this case

$$F = i \int (t_x + it_y)\, ds = \begin{cases} 0, & \text{if } x > 0, \\ P, & \text{if } x < 0, \end{cases} \tag{5.10}$$

or, in terms of the coordinate θ along the unit circle in the ζ-plane,

$$F = \begin{cases} 0, & \text{if } \theta < \pi, \\ P, & \text{if } \theta > \pi. \end{cases} \tag{5.11}$$

This function can be expanded into a Fourier series,

$$F(\theta) = \sum_{k=-\infty}^{\infty} A_k \exp(ik\theta), \tag{5.12}$$

where now

$$A_k = \frac{P}{2\pi} \int_{\pi}^{2\pi} \exp(-ki\theta)\, d\theta. \tag{5.13}$$

The result is

$$A_0 = \tfrac{1}{2}P, \tag{5.14}$$

$$A_k = \frac{iP}{\pi k}, \quad k = \pm 1, \pm 3, \pm 5, \ldots, \tag{5.15}$$

$$A_k = 0, \qquad k = \pm 2, \pm 4, \pm 6, \ldots. \tag{5.16}$$

We now find, from (5.6) – (5.9),

$$a_k = \frac{iP}{\pi k}, \quad k = 1, 3, 5, \ldots, \tag{5.17}$$

$$a_k = 0, \quad k = 2, 4, 6, \ldots, \tag{5.18}$$

$$b_0 = \tfrac{1}{2}P - \frac{iP}{2\pi}, \tag{5.19}$$

$$b_k = \frac{iP}{\pi k}, \quad k = 1, 2, 3, \ldots. \tag{5.20}$$

$$b_k = 0, \quad k = 2, 4, 6, \ldots. \tag{5.21}$$

If we disregard the constant b_0, which can always be corrected by adding a rigid body displacement, and which does not affect the stresses, we have

$$\phi(\zeta) = \frac{iP}{\pi} \sum_{k=1,3}^{\infty} \frac{\zeta^k}{k}, \tag{5.22}$$

$$\psi(\zeta) = \frac{iP}{\pi} \sum_{k=1,3}^{\infty} \frac{\zeta^k}{k}. \tag{5.23}$$

A well known series is

$$\ln \frac{1+\zeta}{1-\zeta} = 2\{\zeta + \frac{\zeta^3}{3} + \frac{\zeta^5}{5} + \cdots\}, \tag{5.24}$$

so that

$$\phi(\zeta) = \frac{iP}{2\pi} \ln \frac{1+\zeta}{1-\zeta}, \tag{5.25}$$

$$\psi(\zeta) = \frac{iP}{2\pi} \ln \frac{1+\zeta}{1-\zeta}, \tag{5.26}$$

Because $(1+\zeta)/(1-\zeta) = iz$ it now follows that, apart from a constant factor,

$$\phi(z) = \frac{iP}{2\pi} \ln z, \tag{5.27}$$

$$\psi(z) = \frac{iP}{2\pi} \ln z, \tag{5.28}$$

The derivatives are

$$\phi'(z) = \frac{iP}{2\pi z} = \frac{iP}{2\pi r} \exp(-i\theta), \tag{5.29}$$

$$\phi''(z) = -\frac{iP}{2\pi z^2} = -\frac{iP}{2\pi r^2} \exp(-2i\theta), \tag{5.30}$$

$$\psi'(z) = \frac{iP}{2\pi z} = \frac{iP}{2\pi r} \exp(-i\theta). \tag{5.31}$$

The Kolosov-Muskhelishvili expressions for the stresses now give

$$\sigma_{xx} + \sigma_{yy} = 2\{\phi'(z) + \overline{\phi'(z)}\} = \frac{2P}{\pi r} \sin\theta, \tag{5.32}$$

$$\begin{aligned} \sigma_{yy} - \sigma_{xx} + 2i\sigma_{xy} &= 2\{\overline{z}\phi''(z) + \psi'(z)\} \\ &= \frac{2P}{\pi r}[\sin\theta(\sin^2\theta - \cos^2\theta) + 2i\cos\theta\sin^2\theta]. \end{aligned} \tag{5.33}$$

From these it follows that

$$\sigma_{xx} = \frac{2P}{\pi r} \sin\theta \cos^2\theta, \tag{5.34}$$

$$\sigma_{yy} = \frac{2P}{\pi r} \sin^3\theta, \tag{5.35}$$

$$\sigma_{xy} = \frac{2P}{\pi r} \cos\theta \sin^2\theta. \tag{5.36}$$

These formulas are in agreement with the classical solution of Flamant.

6. Problems for a circular ring

In this section we will consider an elastic circular ring, under the influence of surface tractions or prescribed displacements along the the inner and the outer boundary, see figure 6.1. The radius of the outer boundary

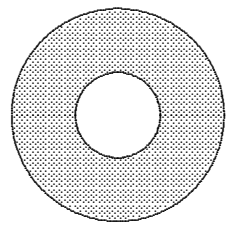

Figure 6.1. Circular ring

is R, and the radius of the inner boundary is αR, where $\alpha < 1$.

6.1 Surface traction boundary conditions

Let us first consider the case that along both boundaries the surface tractions are prescribed, and that along both the loading function F can be represented by a Fourier series. We then have

$$|\zeta| = 1: \quad F = \sum_{k=-\infty}^{\infty} A_k \sigma^k, \tag{6.1}$$

$$|\zeta| = \alpha: \quad F = \sum_{k=-\infty}^{\infty} B_k \sigma^k. \tag{6.2}$$

Here it has been assumed that the ring in the z-plane has been mapped conformally onto a ring in the ζ-plane, such that the outer radius of the ring in the ζ-plane is 1.

The complex stress functions $\phi(\zeta)$ and $\psi(\zeta)$ are analytic throughout the ring-shaped region in the ζ-plane. It is assumed that they are also single-valued, so that logarithmic singularities can be ignored. This means that they can be represented by their Laurent series expansions,

$$\phi(\zeta) = \sum_{k=1}^{\infty} a_k \zeta^k + \sum_{k=1}^{\infty} b_k \zeta^{-k}, \tag{6.3}$$

$$\psi(\zeta) = c_0 + \sum_{k=1}^{\infty} c_k \zeta^k + \sum_{k=1}^{\infty} d_k \zeta^{-k}, \tag{6.4}$$

The coefficients have been given a different notation for positive and negative powers of ζ, to avoid negative indices. The series expansions will converge up to the boundaries $|\zeta| = 1$ and $|\zeta| = \alpha$.

The derivative of the function $\phi(\zeta)$ is

$$\phi'(\zeta) = \sum_{k=1}^{\infty} k a_k \zeta^{k-1} - \sum_{k=1}^{\infty} k b_k \zeta^{-k-1}, \tag{6.5}$$

In general the boundary condition for a given surface traction is given by (2.98),

$$F(\zeta_0) + C = \phi(\zeta_0) + \frac{\omega(\zeta_0)}{\overline{\omega'(\zeta_0)}} \overline{\phi'(\zeta_0)} + \overline{\psi(\zeta_0)}, \tag{6.6}$$

where ζ_0 is a point on the boundary. The conditions along the two boundaries will be elaborated separately.

6.1.1 Outer boundary

Along the outer boundary we have $\zeta_0 = \sigma = \exp(i\theta)$, so that $\overline{\zeta_0} = \sigma^{-1}$. Because the mapping function is $\omega(\zeta) = R\zeta$ it follows that in this case

$$\frac{\omega(\zeta_0)}{\overline{\omega'(\zeta_0)}} = \zeta_0 = \sigma. \tag{6.7}$$

With (6.5) the second term in the boundary condition is

$$\frac{\omega(\zeta_0)}{\overline{\omega'(\zeta_0)}}\,\overline{\phi'(\zeta_0)} = \sum_{k=1}^{\infty} k\overline{a}_k\sigma^{-k+2} - \sum_{k=1}^{\infty} k\overline{b}_k\sigma^{k+2}. \tag{6.8}$$

This can also be written as

$$\frac{\omega(\zeta_0)}{\overline{\omega'(\zeta_0)}}\,\overline{\phi'(\zeta_0)} = \overline{a}_1\sigma + 2\overline{a}_2 + \sum_{k=1}^{\infty}(k+2)\overline{a}_{k+2}\sigma^{-k} - \sum_{k=3}^{\infty}(k-2)\overline{b}_{k-2}\sigma^{k}. \tag{6.9}$$

The third term in the boundary condition is

$$\overline{\psi(\zeta_0)} = \overline{c}_0 + \sum_{k=1}^{\infty}\overline{c}_k\sigma^{-k} + \sum_{k=1}^{\infty}\overline{d}_k\sigma^{k}. \tag{6.10}$$

The complete boundary condition now is, with (6.6), and assuming that on this boundary $C = 0$,

$$\begin{aligned}\sum_{k=-\infty}^{\infty} A_k\sigma^k &= \sum_{k=1}^{\infty} a_k\sigma^k + \sum_{k=1}^{\infty} b_k\sigma^{-k} + \overline{a}_1\sigma + 2\overline{a}_2 + \overline{c}_0 \\ &+ \sum_{k=1}^{\infty}(k+2)\overline{a}_{k+2}\sigma^{-k} - \sum_{k=3}^{\infty}(k-2)\overline{b}_{k-2}\sigma^{k} + \sum_{k=1}^{\infty}\overline{c}_k\sigma^{-k} + \sum_{k=1}^{\infty}\overline{d}_k\sigma^{k}.\end{aligned} \tag{6.11}$$

Using this equation the coefficients c_k and d_k can be expressed into the known coefficients A_k and the other set of unknown coefficients a_k and b_k. The result is as follows.

$$c_0 = \overline{A}_0 - 2a_2, \tag{6.12}$$

$$c_k = \overline{A}_{-k} - (k+2)a_{k+2} - \overline{b}_k, \qquad k = 1, 2, 3, \ldots, \tag{6.13}$$

$$d_1 = \overline{A}_1 - (a_1 + \overline{a}_1), \tag{6.14}$$

$$d_2 = \overline{A}_2 - \overline{a}_2, \tag{6.15}$$

$$d_k = \overline{A}_k - \overline{a}_k + (k-2)b_{k-2}, \qquad k = 3, 4, 5, \ldots. \tag{6.16}$$

One half of the unknown coefficients have now been expressed into the other half.

6.1.2 Inner boundary

Along the inner boundary we have $\zeta_0 = \alpha\sigma = \alpha\exp(i\theta)$, so that $\overline{\zeta_0} = \alpha\sigma^{-1}$. In this case

$$\frac{\omega(\zeta_0)}{\overline{\omega'(\zeta_0)}} = \zeta_0 = \alpha\sigma. \tag{6.17}$$

With (6.5) the second term in the boundary condition is

$$\frac{\omega(\zeta_0)}{\overline{\omega'(\zeta_0)}}\,\overline{\phi'(\zeta_0)} = \sum_{k=1}^{\infty} k\overline{a}_k\alpha^k\sigma^{-k+2} - \sum_{k=1}^{\infty} k\overline{b}_k\alpha^{-k}\sigma^{k+2}. \tag{6.18}$$

This can also be written as

$$\frac{\omega(\zeta_0)}{\overline{\omega'(\zeta_0)}}\,\overline{\phi'(\zeta_0)} = \overline{a}_1\alpha\sigma + 2\overline{a}_2\alpha^2 + \sum_{k=1}^{\infty}(k+2)\overline{a}_{k+2}\alpha^{k+2}\sigma^{-k} - \sum_{k=3}^{\infty}(k-2)\overline{b}_{k-2}\alpha^{-k+2}\sigma^{k}. \tag{6.19}$$

The third term in the boundary condition is

$$\overline{\psi(\zeta_0)} = \overline{c}_0 + \sum_{k=1}^{\infty}\overline{c}_k\alpha^k\sigma^{-k} + \sum_{k=1}^{\infty}\overline{d}_k\alpha^{-k}\sigma^{k}. \tag{6.20}$$

The complete boundary condition now is, with (6.6),

$$\sum_{k=-\infty}^{\infty} B_k\sigma^k + C = \sum_{k=1}^{\infty} a_k\alpha^k\sigma^k + \sum_{k=1}^{\infty} b_k\alpha^{-k}\sigma^{-k} + \overline{a}_1\alpha\sigma + 2\overline{a}_2\alpha^2 + \overline{c}_0 + \sum_{k=1}^{\infty}(k+2)\overline{a}_{k+2}\alpha^{k+2}\sigma^{-k} - \sum_{k=3}^{\infty}(k-2)\overline{b}_{k-2}\alpha^{-k+2}\sigma^{k} + \sum_{k=1}^{\infty}\overline{c}_k\alpha^k\sigma^{-k} + \sum_{k=1}^{\infty}\overline{d}_k\alpha^{-k}\sigma^{k}. \tag{6.21}$$

It is perhaps most convenient to solve these equations again for the coefficients c_k and d_k. The result is

$$c_0 = \overline{B}_0 + \overline{C} - 2a_2\alpha^2, \tag{6.22}$$

$$c_k = \overline{B}_{-k}\alpha^{-k} - (k+2)a_{k+2}\alpha^2 - \overline{b}_k\alpha^{-2k}, \qquad k = 1, 2, 3, \ldots, \tag{6.23}$$

$$d_1 = \overline{B}_1\alpha - (a_1 + \overline{a}_1)\alpha^2, \tag{6.24}$$

$$d_2 = \overline{B}_2\alpha^2 - \overline{a}_2\alpha^4, \tag{6.25}$$

$$d_k = \overline{B}_k\alpha^k - \overline{a}_k\alpha^{2k} + (k-2)b_{k-2}\alpha^2, \qquad k = 3, 4, 5, \ldots. \tag{6.26}$$

The coefficients can now be determined successively.

First consider (6.14) and (6.24). It follows from these equations that

$$A_1 - (a_1 + \overline{a}_1) = B_1\alpha - (a_1 + \overline{a}_1)\alpha^2. \tag{6.27}$$

Hence, if it assumed that $\mathrm{Im}(a_1) = 0$,

$$a_1 = \frac{A_1 - \alpha B_1}{2(1-\alpha^2)}. \tag{6.28}$$

From (6.12) and (6.22) it follows that

$$\overline{A}_0 - 2a_2 = \overline{B}_0 + \overline{C} - 2a_2\alpha^2. \tag{6.29}$$

Hence

$$a_2 = \frac{\overline{A}_0 - \overline{B}_0 - \overline{C}}{2(1-\alpha^2)}. \tag{6.30}$$

From (6.15) and (6.25) it follows that

$$A_2 - a_2 = B_2\alpha^2 - a_2\alpha^4. \tag{6.31}$$

Hence

$$a_2 = \frac{A_2 - \alpha^2 B_2}{1 - \alpha^4}. \tag{6.32}$$

It follows from (6.30) and (6.32) that the value of the constant C must be

$$C = A_0 - B_0 - \frac{\overline{A_2} - \alpha^2 \overline{B_2}}{1 + \alpha^2}. \tag{6.33}$$

The value of the integration constant C appears to follow from the analysis.

From (6.13) and (6.23) it follows that

$$\overline{A}_{-k} - (k+2)a_{k+2} - \overline{b}_k = \overline{B}_{-k}\alpha^{-k} - (k+2)a_{k+2}\alpha^2 - \overline{b}_k\alpha^{-2k}. \tag{6.34}$$

Hence

$$(1 - \alpha^{-2k})\overline{b}_k + (k+2)(1-\alpha^2)a_{k+2} = \overline{A}_{-k} - \alpha^{-k}\overline{B}_{-k},\ k = 1, 2, 3, \ldots \tag{6.35}$$

Furthermore, it follows from (6.16) and (6.26) that

$$A_k - a_k + (k-2)\overline{b}_{k-2} = B_k\alpha^k - a_k\alpha^{2k} + (k-2)\overline{b}_{k-2}\alpha^2. \tag{6.36}$$

Hence

$$-k(1-\alpha^{-2})\overline{b}_k + (1 - \alpha^{2k+4})a_{k+2} = A_{k+2} - \alpha^{k+2}B_{k+2},\ k = 1, 2, 3, \ldots \tag{6.37}$$

The coefficient b_k can be eliminated from (6.35) and (6.37). This gives

$$a_{k+2} = \frac{k(1-\alpha^2)(\overline{A}_{-k} - \alpha^{-k}\overline{B}_{-k}) + (1-\alpha^{-2k})(A_{k+2} - \alpha^{k+2}B_{k+2})}{(1-\alpha^{2k+4})(1-\alpha^{-2k}) + k(k+2)(1-\alpha^2)^2}, \quad k = 1, 2, 3, \ldots \tag{6.38}$$

All coefficients a_k have now been determined. The coefficients b_k can then be determined from (6.35) or (6.37). The coefficients c_k can then be determined from (6.13) or (6.23), and the coefficients d_k can be determined from (6.16) or (6.26). The problem has now been solved in a general form.

6.1.3 Example: Ring under constant pressures

As an example we will consider the case of a ring loaded by a uniform pressure p_2 along its outer boundary and a uniform pressure p_1 along its inner boundary. Along the outer boundary we then have

$$t_x + it_y = -p_2 \exp(i\theta), \tag{6.39}$$

Because along this boundary the length element is $ds = R\,d\theta$ it follows that

$$F = i\int (t_x + it_y)\,ds = -p_2 R \exp(i\theta) = -p_2 R\sigma. \tag{6.40}$$

Comparison with (6.1) shows that all coefficients A_k are zero, except

$$A_1 = -p_2 R. \tag{6.41}$$

Along the inner boundary we have

$$t_x + it_y = p_1 \exp(i\theta), \tag{6.42}$$

Because along this boundary the length element is $ds = -\alpha R\,d\theta$ it follows that

$$F = i\int (t_x + it_y)\,ds = -p_1 \alpha R \exp(i\theta) = -\alpha p_1 R\sigma. \tag{6.43}$$

Comparison with (6.2) shows that all coefficients B_k are zero, except

$$B_1 = -\alpha p_1 R. \tag{6.44}$$

It now follows that all coefficients a_k and b_k are zero, except

$$a_1 = -\frac{(p_2 - \alpha^2 p_1)R}{2(1-\alpha^2)}. \tag{6.45}$$

The constant C appears to be zero, from (6.33). The coefficients c_k are all zero also, and of the coefficients d_k the only non-zero one is

$$d_1 = \frac{(p_2 - p_1)\alpha^2 R}{(1-\alpha^2)}. \tag{6.46}$$

The complex stress functions now are

$$\phi(\zeta) = -\frac{(p_2 - \alpha^2 p_1)R}{2(1-\alpha^2)}\,\zeta, \tag{6.47}$$

$$\psi(\zeta) = \frac{(p_2 - p_1)\alpha^2 R}{(1-\alpha^2)}\,\frac{1}{\zeta}. \tag{6.48}$$

Because the conformal mapping function in this case is $z = R\zeta$ it follows that

$$\phi(z) = -\frac{(p_2 - \alpha^2 p_1)}{2(1-\alpha^2)}\,z, \tag{6.49}$$

$$\psi(z) = \frac{(p_2 - p_1)\alpha^2}{(1-\alpha^2)}\,\frac{R^2}{z}. \tag{6.50}$$

These expressions are in agreement with the results given by Sokolnikoff (1956), p. 300.

7. Elastic half plane with circular cavity

In this chapter and the next we will study the problem of an elastic half plane with a circular cavity, see figure 7.1. The upper boundary of the half plane is assumed to be free of stress, and loading takes place

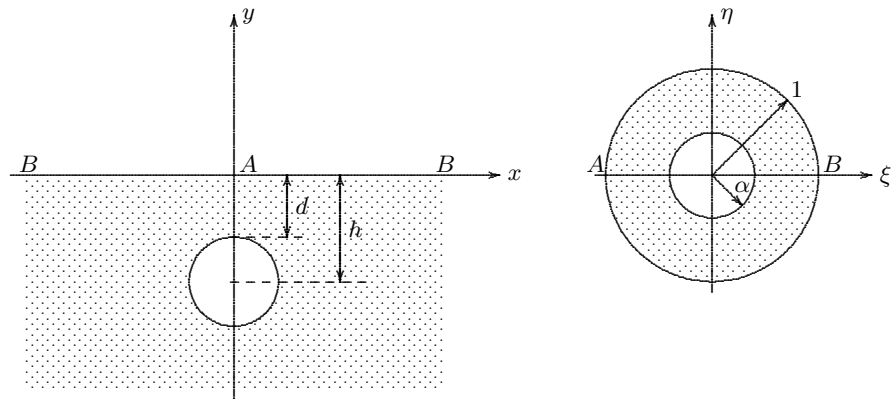

Figure 7.1. Conformal transformation

along the boundary of the circular cavity, in the form of a given stress distribution or a given displacement distribution.

It is assumed that the region in the z-plane can be mapped conformally onto a ring in the ζ-plane, bounded by the circles $|\zeta| = 1$ and $|\zeta| = \alpha$, where $\alpha < 1$. The properties of the mapping function will be studied in this chapter.

7.1 The inner boundary

The conformal transformation is

$$z = \omega(\zeta) = -ia\frac{1+\zeta}{1-\zeta}, \tag{7.1}$$

where a is a certain length. The origin in the z-plane is mapped onto $\zeta = -1$, and the point at infinity in the z-plane is mapped onto $\zeta = 1$, see figure 7.1.

Differentiation of (7.1) with respect to ζ gives

$$\omega'(\zeta) = -\frac{2ia}{(1-\zeta)^2}. \tag{7.2}$$

It will be shown that concentric circles in the ζ-plane are mapped on circles in the z-plane, and the relation between the depth of the circle and its radius with the parameter α, which is the radius of the circle in the ζ-plane, will be derived.

For a circle with radius α in the ζ-plane we have

$$\zeta = \alpha \exp(i\theta), \tag{7.3}$$

where α is a constant, and θ is a variable. With (7.1) this gives

$$x = \frac{2a\alpha \sin\theta}{1+\alpha^2 - 2\alpha\cos\theta}, \tag{7.4}$$

$$y = -\frac{a(1-\alpha^2)}{1+\alpha^2 - 2\alpha\cos\theta}. \tag{7.5}$$

It is now postulated that these formulas represent a circle, at depth h, having a radius r. This means that it is assumed that there exist constants h and r such that

$$x^2 + (y+h)^2 = r^2. \tag{7.6}$$

In order to prove this we will demonstrate that $\partial r^2/\partial\theta = 0$. This is the case if

$$\frac{\partial r^2}{\partial\theta} = 2x\frac{\partial x}{\partial\theta} + 2(y+h)\frac{\partial y}{\partial r} = 0. \tag{7.7}$$

This means that

$$h = -y - x\,\frac{\partial x/\partial\theta}{\partial y/\partial\theta}. \tag{7.8}$$

It follows from (7.4) that

$$\frac{\partial x}{\partial\theta} = a\frac{(1+\alpha^2)2\alpha\cos\theta - 4\alpha^2}{(1+\alpha^2-2\alpha\cos\theta)^2}, \tag{7.9}$$

and from (7.5) it follows that

$$\frac{\partial y}{\partial\theta} = a\frac{(1-\alpha^2)2\alpha\sin\theta}{(1+\alpha^2-2\alpha\cos\theta)^2}. \tag{7.10}$$

Substitution of these two results into (7.8) gives, after some algebraic manipulations,

$$h = a\frac{1+\alpha^2}{1-\alpha^2}, \tag{7.11}$$

which is indeed a constant, and which also proves that r is a constant. With (7.6) the corresponding value of r is found to be

$$r = a\frac{2\alpha}{1-\alpha^2}. \tag{7.12}$$

If the covering depth of the circular cavity in the z-plane is denoted by d, see figure 7.1, it follows that

$$d = a\frac{1-\alpha}{1+\alpha}. \tag{7.13}$$

The ratio of depth and cover is

$$\frac{h}{d} = \frac{1+\alpha^2}{(1-\alpha)^2}. \tag{7.14}$$

If $\alpha \to 0$ the radius of the circular cavity is practically zero, which indicates a very deep tunnel, or a very large covering depth. If $\alpha \to 1$ the covering depth is very small. For every value of h/d the corresponding value of α can be determined from (7.14).

7.2 Multiplication factor

An interesting quantity, that may be needed in elaborating certain specific problems, is the multiplication factor of the transformation. This can be investigated by noting that

$$dz = \frac{dz}{d\zeta}d\zeta = \omega'(\zeta)d\zeta, \tag{7.15}$$

Thus it follows that

$$\frac{|dz|}{|d\zeta|} = |\omega'(\zeta)|. \tag{7.16}$$

From (7.2) it can be derived that in this case

$$\frac{|dz|}{|d\zeta|} = \frac{2a}{1+\alpha^2-2\alpha\cos\theta} = \frac{2a}{1+\alpha^2-\alpha(\sigma+\sigma^{-1})}, \tag{7.17}$$

where $\sigma = \exp(i\theta)$. It may be noted that $\overline{\sigma} = \sigma^{-1}$ so that $\sigma + \sigma^{-1}$ is always real. Eq. (7.17) permits to transform an integration path in the z-plane to the ζ-plane.

7.3 A displacement boundary condition

A simple boundary condition along the inner boundary in the z-plane is that the normal stress, or the radial displacement, is constant along this boundary. In terms of the displacement this means

$$u_x = -u_0 \frac{x}{r}, \tag{7.18}$$

$$u_y = -u_0 \frac{y+h}{r}, \tag{7.19}$$

where u_0 is the radial displacement, directed inwardly. With (7.4), (7.5) and (7.11) this gives

$$u_x = -u_0 \frac{(1-\alpha^2)\sin\theta}{1+\alpha^2-2\alpha\cos\theta}, \tag{7.20}$$

$$u_y = -u_0 \frac{2\alpha-(1+\alpha^2)\cos\theta}{1+\alpha^2-2\alpha\cos\theta}. \tag{7.21}$$

It may be noted that for $\alpha \to 0$ this reduces to $u_x + iu_y = iu_0 \exp(i\theta)$.

7.4 Fourier series expansion

In the complex variable method as used in this report the boundary values have to be expanded into Fourier series,

$$f(\theta) = \sum_{k=-\infty}^{\infty} A_k \exp(ki\theta), \tag{7.22}$$

where

$$A_k = \frac{1}{2\pi}\int_0^{2\pi} f(\theta)\exp(-ki\theta)\,d\theta. \tag{7.23}$$

Some well known integrals (Gröbner & Hofreiter, 1961, section 332) are

$$\int_0^{2\pi} \frac{\cos(k\theta)}{1+\alpha^2-2\alpha\cos\theta}\,d\theta = \frac{2\pi\alpha^k}{1-\alpha^2}, \quad k = 0,1,2,\ldots, \tag{7.24}$$

$$\int_0^{2\pi} \frac{\sin\theta\,\cos(k\theta)}{1+\alpha^2-2\alpha\cos\theta}\,d\theta = 0, \quad k = 0,1,2,\ldots, \tag{7.25}$$

$$\int_0^{2\pi} \frac{\cos\theta\,\cos(k\theta)}{1+\alpha^2-2\alpha\cos\theta}\,d\theta = \pi\alpha^{k-1}\frac{1+\alpha^2}{1-\alpha^2}, \quad k = 1,2,3,\ldots, \tag{7.26}$$

$$\int_0^{2\pi} \frac{\cos\theta\,\cos(k\theta)}{1+\alpha^2-2\alpha\cos\theta}\,d\theta = \frac{2\pi\alpha}{1-\alpha^2}, \quad k = 0, \tag{7.27}$$

$$\int_0^{2\pi} \frac{\sin(k\theta)}{1+\alpha^2-2\alpha\cos\theta}\,d\theta = 0, \quad k = 0,1,2,\ldots, \tag{7.28}$$

$$\int_0^{2\pi} \frac{\cos\theta\,\sin(k\theta)}{1+\alpha^2-2\alpha\cos\theta}\,d\theta = 0, \quad k = 0,1,2,\ldots, \tag{7.29}$$

$$\int_0^{2\pi} \frac{\sin\theta\,\sin(k\theta)}{1+\alpha^2-2\alpha\cos\theta}\,d\theta = \pi\alpha^{k-1}, \quad k = 1,2,3,\ldots, \tag{7.30}$$

$$\int_0^{2\pi} \frac{\sin\theta\,\sin(k\theta)}{1+\alpha^2-2\alpha\cos\theta}\,d\theta = 0, \quad k = 0. \tag{7.31}$$

Using these results it can be shown that the Fourier series expansion of the horizontal displacement u_x, as given by (7.20), is

$$u_x = \sum_{k=-\infty}^{\infty} P_k \exp(ki\theta), \tag{7.32}$$

where

$$P_k = \tfrac{1}{2} i u_0 (1-\alpha^2) \begin{cases} \alpha^{k-1}, & k = 1, 2, 3, \ldots, \\ 0, & k = 0, \\ -\alpha^{-k+1}, & k = -1, -2, -3, \ldots. \end{cases} \tag{7.33}$$

This can also be written as

$$u_x = -u_0 (1-\alpha^2) \sum_{k=1}^{\infty} \alpha^{k-1} \sin(k\theta). \tag{7.34}$$

In figure 7.2 the expression (7.20) is compared with its Fourier series expansion (7.34), the dashed line, taking four terms only, and assuming that $\alpha = 0.5$. It appears that even for such a small number of

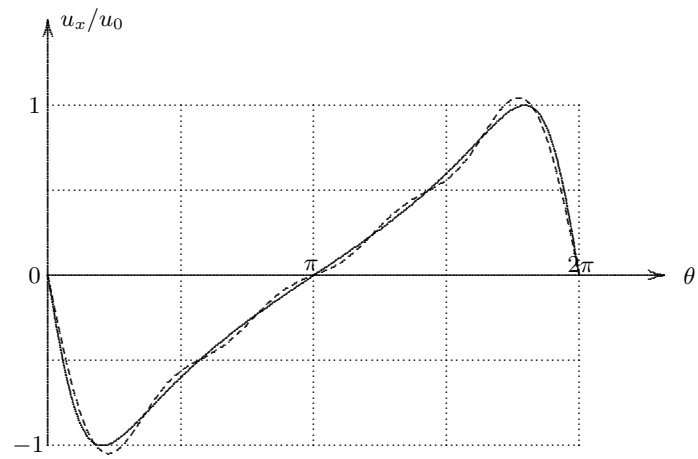

Figure 7.2. Fourier series for u_x, 4 terms

terms the approximation is reasonably good. By taking 10 terms or more, the two expressions become indistinguishable.

The Fourier series expansion of the vertical displacement u_y, as given by (7.21), is

$$u_y = \sum_{k=-\infty}^{\infty} Q_k \exp(ki\theta), \tag{7.35}$$

where

$$Q_k = u_0 \begin{cases} \tfrac{1}{2}(1-\alpha^2)\alpha^{k-1}, & k = 1, 2, 3, \ldots, \\ -\alpha, & k = 0, \\ \tfrac{1}{2}(1-\alpha^2)\alpha^{-k+1}, & k = -1, -2, -3, \ldots. \end{cases} \tag{7.36}$$

This can also be written as

$$u_y = -u_0 \alpha + u_0 (1-\alpha^2) \sum_{k=1}^{\infty} \alpha^{k-1} \cos(k\theta). \tag{7.37}$$

In figure 7.3 the expression (7.21) is compared with its Fourier series expansion (7.37), the dashed line, taking four terms only, and assuming that $\alpha = 0.5$. Again it appears that even with four terms only,

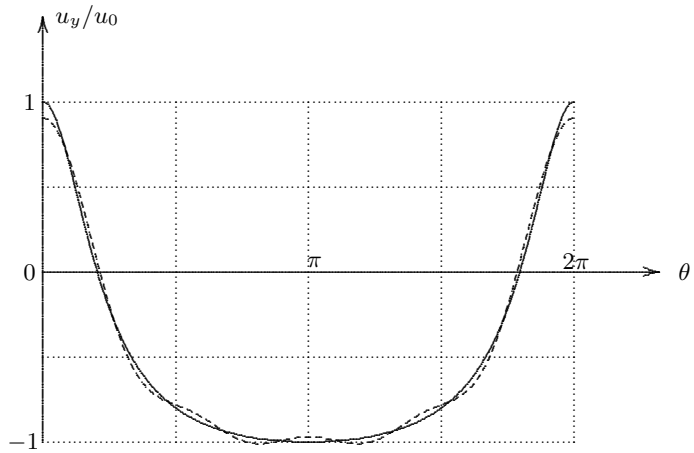

Figure 7.3. Fourier series for u_y, 4 terms

the approximation is reasonably good. By taking 10 terms or more, the two expressions become indistinguishable.

In the complex variable method the boundary condition is expressed in terms of the complex variable $u_x + iu_y$. With (7.34) and (7.37) this is found to be

$$u_x + iu_y = -iu_0\alpha + iu_0(1-\alpha^2)\sum_{k=1}^{\infty}\alpha^{k-1}\exp(ik\theta). \tag{7.38}$$

This can also be written as

$$u_x + iu_y = -iu_0\alpha + iu_0(1-\alpha^2)\sum_{k=1}^{\infty}\alpha^{k-1}\sigma^k, \tag{7.39}$$

where $\sigma = \exp(i\theta)$.

Alternative formulation

The series in (7.39) is a geometrical series, with each term being $\alpha\sigma$ times the previous one. The sum of the series can easily be determined. The result is

$$u_x + iu_y = -iu_0\frac{\alpha-\sigma}{1-\alpha\sigma}. \tag{7.40}$$

This seems a remarkably simple result.

The form (7.40) can also be established immediately from the boundary condition in its original form of eqs. (7.18) and (7.19), if this is written as

$$u_x + iu_y = -u_0\frac{z+ih}{r}, \tag{7.41}$$

and z is written as

$$z = -ia\frac{1+\zeta}{1-\zeta} = -ia\frac{1+\alpha\sigma}{1-\alpha\sigma}. \tag{7.42}$$

The form (7.40) may seem to be inconvenient as a boundary condition because of the factor $1-\alpha\sigma$ in the denominator. It will later be seen, however, that it is convenient to multiply the boundary condition by precisely this same factor. Therefore it will be found that this form of the boundary condition is actually very convenient for further elaboration.

7.5 A stress boundary condition

A simple boundary condition along the cavity boundary in which the stresses are prescribed is the case of a uniform radial stress t. Then

$$t_x = t\frac{x}{r}, \tag{7.43}$$

$$t_y = t\frac{y+h}{r}. \tag{7.44}$$

According to (2.90) this must be integrated along the boundary

$$F = F_1 + iF_2 = i\int_{s_0}^{s}(t_x + it_y)ds = it\int^{s}\frac{z+ih}{r}\,ds. \tag{7.45}$$

Along the boundary of the cavity we may write $z + ih = r\exp(i\beta)$, where r is the constant radius of the circle and β is a variable angle. Along that path $ds = rd\beta$, so that

$$F = it\int_0^{\beta}\exp(i\beta)\,r\,d\beta = tr[\exp(i\beta) - 1] = t(z + ih - r), \tag{7.46}$$

where it has been assumed that the initial point s_0 corresponds to $\beta = 0$.

Expressed into the value of $\zeta = \alpha\sigma$ along the boundary in the ζ-plane the expression (7.46) is found to be

$$F = \frac{2ith\alpha}{(1+\alpha^2)(1-\alpha\sigma)}\,[\alpha - \sigma + i(1-\alpha\sigma)]. \tag{7.47}$$

This is the form of the boundary stress function that will be considered in detail later.

8. First boundary value problem

In this chapter the problem of an elastic half plane with a circular cavity is investigated, for the case that along the boundary of the cavity the surface tractions are prescribed.

The complex stress functions $\phi(\zeta)$ and $\psi(\zeta)$ are analytic throughout the ring-shaped region in the ζ-plane. It is assumed that they are also single-valued, so that logarithmic singularities can be ignored. This means that they can be represented by their Laurent series expansions,

$$\phi(\zeta) = a_0 + \sum_{k=1}^{\infty} a_k \zeta^k + \sum_{k=1}^{\infty} b_k \zeta^{-k}, \tag{8.1}$$

$$\psi(\zeta) = c_0 + \sum_{k=1}^{\infty} c_k \zeta^k + \sum_{k=1}^{\infty} d_k \zeta^{-k}, \tag{8.2}$$

These series expansions will converge up to the boundaries $|\zeta| = 1$ and $|\zeta| = \alpha$. The coefficients a_k, b_k, c_k and d_k must be determined from the boundary conditions.

In general the boundary condition for a given surface traction is given by (3.6),

$$F(\zeta_0) + C = \phi(\zeta_0) + \frac{\omega(\zeta_0)}{\overline{\omega'(\zeta_0)}} \overline{\phi'(\zeta_0)} + \overline{\psi(\zeta_0)}, \tag{8.3}$$

where ζ_0 is a point on the boundary. Without loss of generality the constant C can be assumed to be zero along one of the two boundaries. This will be done for the outer boundary.

The transformation function mapping the region in the z-plane onto the interior of a circular ring in the ζ-plane is the same function as the mapping function for a half plane onto the unit circle,

$$z = \omega(\zeta) = -ia\frac{1+\zeta}{1-\zeta}. \tag{8.4}$$

The origin in the z-plane is mapped onto $\zeta = -1$, and the point at infinity in the z-plane is mapped onto $\zeta = 1$.

Differentiation of (8.4) with respect to ζ gives

$$\omega'(\zeta) = -\frac{2ia}{(1-\zeta)^2}. \tag{8.5}$$

On a circle in the ζ-plane we have $\zeta = \zeta_0 = \rho\sigma$, where $\sigma = \exp(i\theta)$. Then $\overline{\zeta_0} = \rho\sigma^{-1}$. This gives

$$\frac{\omega(\zeta_0)}{\overline{\omega'(\zeta_0)}} = -\tfrac{1}{2}\,\frac{(1+\rho\sigma)(\sigma-\rho)^2}{\sigma^2(1-\rho\sigma)}. \tag{8.6}$$

8.1 Outer boundary

On the outer boundary the radius $\rho = 1$. Then

$$\frac{\omega(\zeta_0)}{\overline{\omega'(\zeta_0)}} = \tfrac{1}{2}(1-\sigma^{-2}). \tag{8.7}$$

The derivative of the function $\phi(\zeta)$ is

$$\phi'(\zeta) = \sum_{k=1}^{\infty} k a_k \zeta^{k-1} - \sum_{k=1}^{\infty} k b_k \zeta^{-k-1}, \tag{8.8}$$

so that

$$\overline{\phi'(\zeta_0)} = \sum_{k=1}^{\infty} k \overline{a}_k \sigma^{-k+1} - \sum_{k=1}^{\infty} k \overline{b}_k \sigma^{k+1}, \tag{8.9}$$

From (8.7) and (8.9) it follows that the second term in the boundary condition is

$$\frac{\omega(\zeta_0)}{\overline{\omega'(\zeta_0)}}\,\overline{\phi'(\zeta_0)} = \tfrac{1}{2}\sum_{k=1}^{\infty} k\overline{a}_k\sigma^{-k+1} - \tfrac{1}{2}\sum_{k=1}^{\infty} k\overline{b}_k\sigma^{k+1}$$
$$-\tfrac{1}{2}\sum_{k=1}^{\infty} k\overline{a}_k\sigma^{-k-1} + \tfrac{1}{2}\sum_{k=1}^{\infty} k\overline{b}_k\sigma^{k-1}. \tag{8.10}$$

The third term in the boundary condition is

$$\overline{\psi(\zeta_0)} = \overline{c}_0 + \sum_{k=1}^{\infty}\overline{c}_k\sigma^{-k} + \sum_{k=1}^{\infty}\overline{d}_k\sigma^{k}. \tag{8.11}$$

The complete boundary condition now is, assuming that $C = 0$ along this boundary,

$$a_0 + \sum_{k=1}^{\infty} a_k\sigma^k + \sum_{k=1}^{\infty} b_k\sigma^{-k} + \tfrac{1}{2}\sum_{k=1}^{\infty} k\overline{a}_k\sigma^{-k+1} - \tfrac{1}{2}\sum_{k=1}^{\infty} k\overline{b}_k\sigma^{k+1}$$
$$-\tfrac{1}{2}\sum_{k=1}^{\infty} k\overline{a}_k\sigma^{-k-1} + \tfrac{1}{2}\sum_{k=1}^{\infty} k\overline{b}_k\sigma^{k-1} + \overline{c}_0 + \sum_{k=1}^{\infty}\overline{c}_k\sigma^{-k} + \sum_{k=1}^{\infty}\overline{d}_k\sigma^{k} = 0. \tag{8.12}$$

This can also be written as

$$\sum_{k=1}^{\infty} a_k\sigma^k + \sum_{k=1}^{\infty} b_k\sigma^{-k} + \tfrac{1}{2}\sum_{k=1}^{\infty}(k+1)\overline{a}_{k+1}\sigma^{-k} - \tfrac{1}{2}\sum_{k=2}^{\infty}(k-1)\overline{b}_{k-1}\sigma^{k}$$
$$-\tfrac{1}{2}\sum_{k=2}^{\infty}(k-1)\overline{a}_{k-1}\sigma^{-k} + \tfrac{1}{2}\sum_{k=1}^{\infty}(k+1)\overline{b}_{k+1}\sigma^{k} + a_0 + \tfrac{1}{2}\overline{a}_1 + \tfrac{1}{2}\overline{b}_1$$
$$+\overline{c}_0 + \sum_{k=1}^{\infty}\overline{c}_k\sigma^{-k} + \sum_{k=1}^{\infty}\overline{d}_k\sigma^{k} = 0. \tag{8.13}$$

The coefficients c_k and d_k can be solved from this equation. The result is

$$c_0 = -\overline{a}_0 - \tfrac{1}{2}a_1 - \tfrac{1}{2}b_1, \tag{8.14}$$

$$c_k = -\overline{b}_k + \tfrac{1}{2}(k-1)a_{k-1} - \tfrac{1}{2}(k+1)a_{k+1}, \qquad k = 1, 2, 3, \ldots, \tag{8.15}$$

$$d_k = -\overline{a}_k + \tfrac{1}{2}(k-1)b_{k-1} - \tfrac{1}{2}(k+1)b_{k+1}, \qquad k = 1, 2, 3, \ldots, \tag{8.16}$$

One half of the unknown coefficients have now been expressed into the other half. It may be noted that for $k = 1$ the last two expressions each contain a non-existing term, but with a factor 0. If the coefficients a_k and b_k can be found, the determination of c_k and d_k is explicit and straightforward.

8.2 Inner boundary

On the inner boundary the radius $\rho = \alpha$, and $\zeta_0 = \alpha\sigma$. Equation (8.6) now gives

$$\frac{\omega(\zeta_0)}{\overline{\omega'(\zeta_0)}} = \frac{-\alpha\sigma - (1-2\alpha^2) + \alpha(2-\alpha^2)\sigma^{-1} - \alpha^2\sigma^{-2}}{2(1-\alpha\sigma)}. \tag{8.17}$$

In contrast with the case of the boundary condition at the outer boundary, where the factor representing the conformal transformation was very simple, see (8.7), this factor appears to be a rather complicated expression at the inner boundary, especially because of the appearance of the factor $(1-\alpha\sigma)$, or $(1-\zeta_0)$, in the denominator of (8.17). In order to eliminate this difficulty, all the terms in the boundary condition are multiplied by this factor. It may be noted that this factor is never equal to zero inside the ring in the ζ-plane.

The boundary condition (8.3) is now written as

$$F^*(\zeta_0) + C(1-\zeta_0) = T_1(\zeta_0) + T_2(\zeta_0) + T_3(\zeta_0), \tag{8.18}$$

where

$$F^*(\zeta_0) = (1-\zeta_0)F(\zeta_0), \tag{8.19}$$

$$T_1(\zeta_0) = (1-\zeta_0)\phi(\zeta_0), \tag{8.20}$$

$$T_2(\zeta_0) = (1-\zeta_0)\frac{\omega(\zeta_0)}{\overline{\omega'(\zeta_0)}}\,\overline{\phi'(\zeta_0)}, \tag{8.21}$$

$$T_3(\zeta_0) = (1-\zeta_0)\overline{\psi(\zeta_0)}. \tag{8.22}$$

Each of these terms will be considered separately, before attempting to solve the complete equation.

It is assumed that in the boundary condition (8.3) the function $F(\zeta_0)$ can be written as

$$F(\zeta_0) = F(\alpha\sigma) = \sum_{k=-\infty}^{\infty} B_k\sigma^k, \tag{8.23}$$

where the coefficients B_k are given. The modified boundary function $F^*(\zeta_0)$ is written as

$$F^*(\zeta_0) = F^*(\alpha\sigma) = \sum_{k=-\infty}^{\infty} A_k\sigma^k, \tag{8.24}$$

The coefficients A_k can easily be calculated from the coefficients B_k, using the definition (8.19). The result is

$$A_k = B_k - \alpha B_{k-1}, \qquad k = -\infty, \ldots, \infty. \tag{8.25}$$

8.2.1 Term 1

The first term in the modified boundary condition is

$$\begin{aligned} T_1(\zeta_0) &= (1-\alpha\sigma)\phi(\alpha\sigma) = \\ &= a_0 + \sum_{k=1}^{\infty}(a_k - a_{k-1})\alpha^k\sigma^k - b_1 + \sum_{k=1}^{\infty}(b_k - b_{k+1})\alpha^{-k}\sigma^{-k}. \end{aligned} \tag{8.26}$$

If it is assumed that

$$b_0 = 0, \tag{8.27}$$

then eq. (8.26) can also be written as

$$T_1(\zeta_0) = a_0 + \sum_{k=1}^{\infty}(a_k - a_{k-1})\alpha^k\sigma^k + \sum_{k=0}^{\infty}(b_k - b_{k+1})\alpha^{-k}\sigma^{-k}. \tag{8.28}$$

8.2.2 Term 2

The second term in the modified boundary condition is considered as a product of two terms,

$$T_2(\zeta_0) = T_{21}(\zeta_0) \times T_{22}(\zeta_0), \tag{8.29}$$

where

$$T_{21}(\zeta_0) = (1-\zeta_0)\frac{\omega(\zeta_0)}{\overline{\omega'(\zeta_0)}}, \tag{8.30}$$

and

$$T_{22}(\zeta_0) = \overline{\phi'(\zeta_0)}. \tag{8.31}$$

With (8.17) the first factor of the second term can be written as

$$2T_{21}(\zeta_0) = -\alpha\sigma - (1-2\alpha^2) + \alpha(2-\alpha^2)\sigma^{-1} - \alpha^2\sigma^{-2}. \tag{8.32}$$

The derivative of the function $\phi(\zeta)$ at $\zeta = \zeta_0$ is

$$\phi'(\zeta_0) = \sum_{k=1}^{\infty} k a_k \alpha^{k-1}\sigma^{k-1} - \sum_{k=1}^{\infty} k b_k \alpha^{-k-1}\sigma^{-k-1}, \tag{8.33}$$

so that the second factor of the second term is

$$T_{22}(\zeta_0) = \sum_{k=1}^{\infty} k\overline{a}_k \alpha^{k-1}\sigma^{-k+1} - \sum_{k=1}^{\infty} k\overline{b}_k \alpha^{-k-1}\sigma^{k+1}. \tag{8.34}$$

Multiplication of the two factors (8.32) and (8.34) leads to the following expression for the second term

$$\begin{aligned}
2T_2(\zeta_0) = &-\big[(1-2\alpha^2)\overline{a}_1 + 2\alpha^2\overline{a}_2 - \overline{b}_1\big] \\
&\qquad -\big[\alpha^2\overline{a}_1 + (2-\alpha^2)\overline{b}_1 - 2\overline{b}_2\big]\alpha^{-1}\sigma \\
&-\sum_{k=1}^{\infty}\big[\alpha^2(k+2)\overline{a}_{k+2} + (1-2\alpha^2)(k+1)\overline{a}_{k+1} \\
&\qquad -(2-\alpha^2)k\overline{a}_k + (k-1)\overline{a}_{k-1}\big]\alpha^k\sigma^{-k} \\
&+\sum_{k=2}^{\infty}\big[\alpha^2(k-2)\overline{b}_{k-2} + (1-2\alpha^2)(k-1)\overline{b}_{k-1} \\
&\qquad -(2-\alpha^2)k\overline{b}_k + (k+1)\overline{b}_{k+1}\big]\alpha^{-k}\sigma^k.
\end{aligned} \tag{8.35}$$

It appears from this expression that there are four levels of coefficients involved in the equation: from a_{k-1} to a_{k+2}, and from b_{k-2} to b_{k+1}. This is not very encouraging, as it may lead to a rather complicated system of equations.

8.2.3 Term 3

In order to evaluate the third term it is noted that the value of the function $\psi(\zeta)$ at $\zeta = \zeta_0$ is

$$\psi(\zeta_0) = c_0 + \sum_{k=1}^{\infty} c_k \alpha^k\sigma^k + \sum_{k=1}^{\infty} d_k \alpha^{-k}\sigma^{-k}, \tag{8.36}$$

so that

$$\overline{\psi(\zeta_0)} = \overline{c}_0 + \sum_{k=1}^{\infty} \overline{c}_k \alpha^k\sigma^{-k} + \sum_{k=1}^{\infty} \overline{d}_k \alpha^{-k}\sigma^k. \tag{8.37}$$

The third term is the product of this expression and a factor $(1-\alpha\sigma)$, see eq. (8.22). This gives

$$\begin{aligned}
T_3(\zeta_0) = &\big[\overline{c}_0 - \alpha^2\overline{c}_1\big] - \big[\alpha^2\overline{c}_0 - \overline{d}_1\big]\alpha^{-1}\sigma \\
&+\sum_{k=1}^{\infty}\big[\overline{c}_k - \alpha^2\overline{c}_{k+1}\big]\alpha^k\sigma^{-k} + \sum_{k=2}^{\infty}\big[\overline{d}_k - \alpha^2\overline{d}_{k-1}\big]\alpha^{-k}\sigma^k.
\end{aligned} \tag{8.38}$$

Using the relations (8.14), (8.15) and (8.16) this expression can be rewritten in terms of a_k and b_k. The result is

$$\begin{aligned}
2T_3(\zeta_0) = &-\big[2a_0 + \overline{a}_1 + \overline{b}_1 - 2\alpha^2 b_1 - 2\alpha^2\overline{a}_2\big] \\
&\qquad +\big[2\alpha^2 a_0 - 2a_1 + \alpha^2\overline{a}_1 + \alpha^2\overline{b}_1 - 2\overline{b}_2\big]\alpha^{-1}\sigma
\end{aligned}$$

$$
\begin{aligned}
&+\sum_{k=1}^{\infty}\big[-2b_k+2\alpha^2 b_{k+1}-(k+1)\overline{a}_{k+1}+(k-1)\overline{a}_{k-1}\\
&\qquad\qquad +\alpha^2(k+2)\overline{a}_{k+2}-\alpha^2 k\overline{a}_k\big]\alpha^k\sigma^{-k}\\
&+\sum_{k=2}^{\infty}\big[-2a_k+2\alpha^2 a_{k-1}+(k-1)\overline{b}_{k-1}-(k+1)\overline{b}_{k+1}\\
&\qquad\qquad -\alpha^2(k-2)\overline{b}_{k-2}+\alpha^2 k\overline{b}_k\big]\alpha^{-k}\sigma^k. \qquad (8.39)
\end{aligned}
$$

Again it appears that there are four levels of coefficients involved in the equation: from a_{k-1} to a_{k+2}, and from b_{k-2} to b_{k+1}.

8.2.4 Terms 2 and 3

With (8.35) and (8.39) it follows that the sum of terms 2 and 3 is

$$
\begin{aligned}
&T_2(\zeta_0)+T_3(\zeta_0)=-a_0\\
&\quad+\sum_{k=0}^{\infty}\big[(1-\alpha^2)k\overline{a}_k-(1-\alpha^2)(k+1)\overline{a}_{k+1}-b_k+\alpha^2 b_{k+1}\big]\alpha^k\sigma^{-k}\\
&\quad+\sum_{k=1}^{\infty}\big[(1-\alpha^2)(k-1)\overline{b}_{k-1}-(1-\alpha^2)k\overline{b}_k+\alpha^2 a_{k-1}-a_k\big]\alpha^{-k}\sigma^k, \qquad (8.40)
\end{aligned}
$$

if it is again assumed that $b_0=0$, see (8.27).

It now appears that in this sum of two terms only two levels of coefficients occur in the equation: from a_{k-1} to a_k, and from b_{k-1} to b_k. Two of the four levels of coefficients appear to have canceled.

8.2.5 Terms 1, 2 and 3

The sum of all three terms is, with (8.28) and (8.40),

$$
\begin{aligned}
&T_1(\zeta_0)+T_2(\zeta_0)+T_3(\zeta_0)=\\
&\qquad=\sum_{k=0}^{\infty}\big[(1-\alpha^2)k\overline{a}_k-(1-\alpha^2)(k+1)\overline{a}_{k+1}\\
&\qquad\qquad +(\alpha^2-\alpha^{-2k})b_{k+1}-(1-\alpha^{-2k})b_k\big]\alpha^k\sigma^{-k}\\
&\qquad+\sum_{k=1}^{\infty}\big[(1-\alpha^2)(k-1)\overline{b}_{k-1}-(1-\alpha^2)k\overline{b}_k\\
&\qquad\qquad +(\alpha^2-\alpha^{2k})a_{k-1}-(1-\alpha^{2k})a_k\big]\alpha^{-k}\sigma^k. \qquad (8.41)
\end{aligned}
$$

It now appears that in the final expression for the sum of all three terms only two levels of coefficients occur in the equation: from a_{k-1} to a_k, and from b_{k-1} to b_k.

8.2.6 The inner boundary condition

According to the modified boundary condition (8.18) the value of the quantity $T1+T2+T3-C(1-\zeta_0)$ must be equal to $F^*(\zeta_0)$, which is represented by its Fourier series expansion (8.24). Hence

$$
T_1(\zeta_0)+T_2(\zeta_0)+T_3(\zeta_0)-C(1-\alpha\sigma)=F^*(\sigma)=\sum_{k=-\infty}^{+\infty}A_k\sigma^k. \qquad (8.42)
$$

It follows from (8.41) and (8.42) that

$$
\begin{aligned}
&(1-\alpha^2)k\overline{a}_k-(1-\alpha^2)(k+1)\overline{a}_{k+1}\\
&\quad+(\alpha^2-\alpha^{-2k})b_{k+1}-(1-\alpha^{-2k})b_k=A_{-k}\alpha^{-k},\quad k=1,2,3,\ldots, \qquad (8.43)
\end{aligned}
$$

and

$$(1-\alpha^2)(k-1)\overline{b}_{k-1}-(1-\alpha^2)k\overline{b}_k$$
$$+(\alpha^2-\alpha^{2k})a_{k-1}-(1-\alpha^{2k})a_k=A_k\alpha^k,\quad k=2,3,4,\ldots. \tag{8.44}$$

From these equations the coefficients a_k and b_k must be determined. The conditions for the coefficients of σ^0 and σ^1 must be considered separately. These conditions are

$$(1-\alpha^2)\overline{a}_1+(1-\alpha^2)b_1+C=-A_0, \tag{8.45}$$

$$(1-\alpha^2)\overline{b}_1+(1-\alpha^2)a_1-C\alpha^2=-A_1\alpha, \tag{8.46}$$

or

$$(1-\alpha^2)\overline{a}_1+(1-\alpha^2)b_1-\overline{C}\alpha^2=-\overline{A_1}\alpha, \tag{8.47}$$

It follows from (8.45) and (8.47) that

$$C+\overline{C}\alpha^2=-A_0+\overline{A_1}\alpha, \tag{8.48}$$

which determines the integration constant C.

All the coefficients can now be determined successively, except for the constant a_0, which remains undetermined, which represents an arbitrary rigid body displacements. Of the constants a_1 and b_1 only the combination $a_1+\overline{b}_1$ is determined by the conditions (8.45) and (8.47). Its complex conjugate remains undetermined.

8.2.7 Uniform radial stress problem

In the case of a uniform radial stress at the cavity boundary the boundary function F is, with (7.47),

$$F=\frac{2ith\alpha}{(1+\alpha^2)(1-\alpha\sigma)}\,[\alpha-\sigma+i(1-\alpha\sigma)]. \tag{8.49}$$

This means that the modified boundary function F^* is, with (8.19),

$$F^*=\frac{2ith\alpha}{1+\alpha^2}\,[\alpha-\sigma+i(1-\alpha\sigma)]. \tag{8.50}$$

This means that only the terms of order 0 and 1 are unequal to zero,

$$A_0=\frac{2ith\alpha}{1+\alpha^2}\,(\alpha+i), \tag{8.51}$$

$$A_1=-\frac{2ith\alpha}{1+\alpha^2}\,(1+i\alpha). \tag{8.52}$$

It now follows from (8.48) that the constant C is as follows.

$$C=\frac{2th\alpha}{1+\alpha^2}=tr. \tag{8.53}$$

It now also follows that

$$F+C=\frac{2ith\alpha}{(1+\alpha^2)(1-\alpha\sigma)}\,(\alpha-\sigma). \tag{8.54}$$

This equation is given for later reference.

Equation (8.45) now gives

$$b_1=-\overline{a}_1-\frac{2ith\alpha^2}{1-\alpha^4}, \tag{8.55}$$

where a_1 appears to be undetermined. This seems to be an essential difficulty, because it means that a non-trivial term in the series expansion of the stress functions, namely a term of the form $\phi(\zeta)=a_1\zeta$, is undetermined by the boundary conditions. It will appear later that the value of the constant a_1 can be determined by requiring that the solution converges at infinity.

9. Jeffery's problem

In this chapter the problem of uniform radial stress along the cavity will be further evaluated, in order to be able to validate the solution, and to obtain numerical values. A partial solution of this problem, considering the stresses only, has first been given by Jeffery (1920), using bipolar coordinates, see also Timoshenko & Goodier (1951).

9.1 Calculation of the coefficients

It is assumed that all the coefficients are purely imaginary, because of the symmetry of the problem. Therefore we write

$$a_k = ip_k, \tag{9.1}$$

$$b_k = iq_k, \tag{9.2}$$

$$c_k = ir_k, \tag{9.3}$$

$$d_k = is_k. \tag{9.4}$$

It is assumed that the coefficient p_0 can be determined later, from the condition that the displacement at infinity is zero.

The relation between the first two coefficients p_1 and q_1 now is, with (8.55),

$$q_1 = p_1 - th\,\frac{2\alpha^2}{1-\alpha^4}, \tag{9.5}$$

but the value of p_1 remains undetermined at this stage. It is now postulated that a second relation between p_1 and q_1 can be found by requiring that the series expansions in the function $\phi(\zeta)$ converge. Actually, it has been found experimentally that for any arbitrary value of p_1 the coefficients p_k and q_k become identical for $k \to \infty$, but in general unequal to zero. This would mean that the series expansions for the stress functions $\phi(\zeta)$ and $\psi(\zeta)$ may still converge for points inside the unit circle, i.e. for $|\zeta| < 1$, but that they will diverge on the circle itself, in particular for $\zeta = 1$, which represents the point at infinity. This suggests that an additional condition can be obtained by requiring that convergence of the series expansions near infinity is ensured by the condition that the coefficients of the series expansions tend towards zero for $k \to \infty$. It is not immediately certain that this will be sufficient for convergence, but it is at least necessary. That this will also be sufficient will appear in the worked examples.

The correct value of p_1 can be found by assuming two arbitrary starting values (e.g. 0 and 1), calculating the limiting value of the coefficients, and then determining the correct value by linear interpolation such that the limiting value of the coefficients for $k \to \infty$ is zero.

The remaining coefficients p_k and q_k can be determined from the equations (8.43) and (8.44), which give

$$\begin{aligned}(1-\alpha^2)(k+1)p_{k+1} + (\alpha^2 - \alpha^{-2k})q_{k+1} &= \\ = (1-\alpha^2)kp_k + (1-\alpha^{-2k})q_k, &\quad k = 1,2,3,\ldots.\end{aligned} \tag{9.6}$$

$$\begin{aligned}(1-\alpha^{2k+2})p_{k+1} - (1-\alpha^2)(k+1)q_{k+1} &= \\ = (\alpha^2 - \alpha^{2k+2})p_k - (1-\alpha^2)kq_k, &\quad k = 1,2,3,\ldots.\end{aligned} \tag{9.7}$$

This system of equations can be solved numerically. The form of the system of equations is not very well suited for such a solution, however, because some of the coefficients are unbounded if $k \to \infty$. Therefore they can better be re-arranged and rewritten as follows.

$$\begin{aligned}(1-\alpha^{2k+2})p_{k+1} - (1-\alpha^2)(k+1)q_{k+1} &= \\ = (\alpha^2 - \alpha^{2k+2})p_k - (1-\alpha^2)kq_k, &\quad k = 1,2,3,\ldots.\end{aligned} \tag{9.8}$$

$$(1-\alpha^2)(k+1)\alpha^{2k}p_{k+1} - (1-\alpha^{2k+2})q_{k+1} = \\ = (1-\alpha^2)k\alpha^{2k}p_k - (1-\alpha^{2k})q_k, \quad k = 1, 2, 3, \ldots. \tag{9.9}$$

Written in this form the terms remain finite when $k \to \infty$, and the terms on the main diagonal do not tend towards zero.

The system of equations can now be solved in successive steps, starting from the given values of p_1 and q_1.

The coefficients r_k and s_k can be determined using the relations (8.14) – (8.16) and (9.3) and (9.4). This gives

$$r_0 = p_0 - \tfrac{1}{2}p_1 - \tfrac{1}{2}q_1, \tag{9.10}$$

$$r_k = q_k - \tfrac{1}{2}(k+1)p_{k+1} + \tfrac{1}{2}(k-1)p_{k-1}, \qquad k = 1, 2, 3, \ldots, \tag{9.11}$$

$$s_k = p_k - \tfrac{1}{2}(k+1)q_{k+1} + \tfrac{1}{2}(k-1)q_{k-1}, \qquad k = 1, 2, 3, \ldots. \tag{9.12}$$

All the coefficients now are known, so that the solution can be further elaborated.

The uniform radial stress problem

In the particular case considered here, it has been found, by trial and error, that by choosing the second relation between p_1 and q_1 in the form

$$q_1 = \alpha^2 p_1, \tag{9.13}$$

it follows from the equations (9.6) and (9.7) that p_2 and q_2 are identical to zero. All further coefficients then are also zero, because the system of equations admits a solution in which all coefficients are equal. The only non-zero coefficients then are, when they are all expressed into p_1,

$$p_0 = -(1+\alpha^2)p_1, \tag{9.14}$$

$$p_1 = \frac{2\alpha^2 th}{(1-\alpha^2)(1-\alpha^4)}, \tag{9.15}$$

$$q_1 = \alpha^2 p_1, \tag{9.16}$$

$$r_0 = -\tfrac{3}{2}(1+\alpha^2)p_1, \tag{9.17}$$

$$r_1 = \alpha^2 p_1, \tag{9.18}$$

$$r_2 = \tfrac{1}{2}p_1, \tag{9.19}$$

$$s_1 = p_1, \tag{9.20}$$

$$s_2 = \tfrac{1}{2}\alpha^2 p_1. \tag{9.21}$$

Here the coefficient p_0 has been determined such that the displacement at infinity is zero.

9.2 The stress functions

The stress functions now are

$$\phi(\zeta) = ip_1[-(1+\alpha^2) + \zeta + \alpha^2/\zeta], \tag{9.22}$$

$$\psi(\zeta) = ip_1[-\tfrac{3}{2}(1+\alpha^2) + \alpha^2\zeta + \tfrac{1}{2}\zeta^2 + 1/\zeta + \tfrac{1}{2}\alpha^2/\zeta^2]. \tag{9.23}$$

For the evaluation of the stresses and the displacements the derivatives are also needed. These are

$$\phi'(\zeta) = ip_1[1 - \alpha^2/\zeta^2], \tag{9.24}$$

$$\phi''(\zeta) = ip_1[2\alpha^2/\zeta^3], \tag{9.25}$$

$$\psi'(\zeta) = ip_1[\alpha^2 + \zeta - 1/\zeta^2 - \alpha^2/\zeta^3]. \tag{9.26}$$

In order to be able to verify the boundary conditions the conformal transformation and its derivative are also needed. These are

$$z = \omega(\zeta) = -ia\frac{1+\zeta}{1-\zeta}, \tag{9.27}$$

$$\frac{dz}{d\zeta} = \omega'(\zeta) = -\frac{2ia}{(1-\zeta)^2}. \tag{9.28}$$

From these equations it follows that

$$\frac{\omega(\zeta)}{\overline{\omega'(\zeta)}} = -\tfrac{1}{2}\,\frac{1+\zeta}{1-\zeta}\,(1-\overline{\zeta})^2. \tag{9.29}$$

9.3 Verification of the boundary conditions

The boundary condition on the top surface is that this must be free of stress. In terms of ζ this boundary condition is

$$|\zeta| = 1 \;:\; \phi(\zeta) + \frac{\omega(\zeta)}{\overline{\omega'(\zeta)}}\overline{\phi'(\zeta)} + \overline{\psi(\zeta)} = 0, \tag{9.30}$$

The boundary condition at the boundary of the cavity is that here the radial stress should be t. The appropriate boundary condition is

$$|\zeta| = \alpha \;:\; \phi(\zeta) + \frac{\omega(\zeta)}{\overline{\omega'(\zeta)}}\overline{\phi'(\zeta)} + \overline{\psi(\zeta)} = F(\zeta) + C, \tag{9.31}$$

where $F(\zeta) + C$ is given by (8.54),

$$F(\zeta) + C = \frac{2ith\alpha}{(1+\alpha^2)(1-\alpha\sigma)}\,(\alpha - \sigma). \tag{9.32}$$

In (9.31) the value of ζ on the boundary is $\zeta = \alpha\sigma$, where $\sigma = \exp(i\theta)$, and θ is the tangential polar coordinate in the ζ-plane.

9.3.1 The first boundary condition

Along the boundary $|\zeta| = 1$ we may write $\zeta = \sigma = \exp(i\theta)$, so that $\overline{\zeta} = \exp(-i\theta) = 1/\sigma$. Eq. (9.29) then gives

$$|\zeta| = 1 \;:\; \frac{\omega(\zeta)}{\overline{\omega'(\zeta)}} = \tfrac{1}{2}\,(1 - \sigma^{-2}). \tag{9.33}$$

This is identical to (8.7). Furthermore we have

$$|\zeta| = 1 \;:\; \phi(\zeta) = \tfrac{1}{2}ip_1[-2 - 2\alpha^2 + 2\sigma + 2\alpha^2\sigma^{-1}], \tag{9.34}$$

$$|\zeta| = 1 \;:\; \overline{\phi'(\zeta)} = ip_1[-1 + \alpha^2\sigma^2], \tag{9.35}$$

$$|\zeta| = 1 \;:\; \frac{\omega(\zeta)}{\overline{\omega'(\zeta)}}\overline{\phi'(\zeta)} = \tfrac{1}{2}ip_1[-1 - \alpha^2 + \alpha^2\sigma^2 + \sigma^{-2}], \tag{9.36}$$

$$|\zeta| = 1 \;:\; \overline{\psi(\zeta)} = \tfrac{1}{2}ip_1[3 + 3\alpha^2 - 2\alpha^2\sigma^{-1} - \sigma^{-2} - 2\sigma - \alpha^2\sigma^2], \tag{9.37}$$

It follows from (9.34), (9.36) and (9.37) that the boundary condition (9.30) is indeed satisfied.

9.3.2 The second boundary condition

Along the boundary $|\zeta| = \alpha$ we may write $\zeta = \alpha\sigma = \alpha\exp(i\theta)$, so that $\overline{\zeta} = \alpha\exp(-i\theta) = \alpha/\sigma$. Eq. (9.29) then gives

$$|\zeta| = \alpha \ : \ \frac{\omega(\zeta)}{\overline{\omega'(\zeta)}} = -\frac{1}{2\sigma^2}\frac{1+\alpha\sigma}{1-\alpha\sigma}(\alpha-\sigma)^2. \tag{9.38}$$

This is identical to (8.17). Furthermore we have

$$|\zeta| = \alpha \ : \ \phi(\zeta) = \frac{ip_1}{\sigma}(\alpha-\sigma)(1-\alpha\sigma), \tag{9.39}$$

$$|\zeta| = \alpha \ : \ \overline{\phi'(\zeta)} = -ip_1(1-\sigma^2), \tag{9.40}$$

$$|\zeta| = \alpha \ : \ \frac{\omega(\zeta)}{\overline{\omega'(\zeta)}}\overline{\phi'(\zeta)} = \frac{ip_1}{2\sigma^2}\frac{1+\alpha\sigma}{1-\alpha\sigma}(\alpha-\sigma)^2(1-\sigma^2), \tag{9.41}$$

$$|\zeta| = \alpha \ : \ \overline{\psi(\zeta)} = \frac{ip_1}{2\alpha\sigma^2}(\alpha-\sigma)[2\sigma^2-\alpha^2-\alpha\sigma-2\alpha^3\sigma+\alpha^2\sigma^2+\alpha\sigma^3]. \tag{9.42}$$

It follows from (9.39), (9.41) and (9.42) that the boundary condition (9.31) is indeed satisfied, provided that

$$p_1 = \frac{2th}{(1+\alpha^2)(1-\alpha^2)^2}. \tag{9.43}$$

This is identical to the value given in (9.15). It may be concluded that the solution, as given by the equations (9.22) and (9.23) satisfies all the conditions, and thus is the solution of the problem.

9.4 Displacements of the surface

In this section the displacement of the upper surface ($y = 0$) are determined. It will appear that simple analytic formulas can be obtained.

The displacements can be determined from the equation

$$2\mu(u+iv) = \kappa\phi(\zeta) - \frac{\omega(\zeta)}{\overline{\omega'(\zeta)}}\overline{\phi'(\zeta)} - \overline{\psi(\zeta)}, \tag{9.44}$$

where $\kappa = 3-4\nu$. To determine the displacements of the upper boundary $y = 0$ from equation (9.44) the value of ζ must be taken along the unit circle, $|\zeta| = 1$. Because along this boundary the condition (9.30) is satisfied, it follows that the displacements along this boundary may also be determined from the relation

$$|\zeta| = 1 \ : \ 2\mu(u+iv) = (\kappa+1)\phi(\zeta), \tag{9.45}$$

which is of a somewhat simpler form than (9.44).

With (9.34) it follows that

$$|\zeta| = 1 \ : \ 2\mu(u+iv) = (\kappa+1)ip_1[-(1+\alpha^2)+(\sigma+\alpha^2\sigma^{-1})]. \tag{9.46}$$

If we write $\sigma = \cos\theta + i\sin\theta$ it follows that

$$|\zeta| = 1 \ : \ 2\mu u/p_1 = -(\kappa+1)(1-\alpha^2)\sin\theta, \tag{9.47}$$

$$|\zeta| = 1 \ : \ 2\mu v/p_1 = -(\kappa+1)(1+\alpha^2)(1-\cos\theta). \tag{9.48}$$

On the boundary $|\zeta| = 1$ we have, from (9.27),

$$|\zeta| = 1 \ : \ x = a\frac{\sin\theta}{1-\cos\theta}. \tag{9.49}$$

From this equation it can be derived that

$$\sin\theta = \frac{2x/a}{1+x^2/a^2}, \tag{9.50}$$

$$1-\cos\theta = \frac{2}{1+x^2/a^2}, \tag{9.51}$$

Thus the displacements of the surface are

$$y=0 \;:\; \frac{2\mu u}{p_1} = -(\kappa+1)\,(1-\alpha^2)\,\frac{2x/a}{1+x^2/a^2}, \tag{9.52}$$

$$y=0 \;:\; \frac{2\mu v}{p_1} = -(\kappa+1)\,(1+\alpha^2)\,\frac{2}{1+x^2/a^2}, \tag{9.53}$$

where p_1 is given by (9.15). The formulas may also be written as

$$y=0 \;:\; \frac{2\mu u}{th} = -4(1-\nu)\,\frac{(2\alpha)^2}{1-\alpha^4}\,\frac{x/a}{1+x^2/a^2}, \tag{9.54}$$

$$y=0 \;:\; \frac{2\mu v}{th} = -4(1-\nu)\,\frac{(2\alpha)^2}{(1-\alpha^2)^2}\,\frac{1}{1+x^2/a^2}, \tag{9.55}$$

where α is determined by the ratio

$$\frac{h}{r} = \frac{1+\alpha^2}{2\alpha}, \tag{9.56}$$

(h being the depth of the center of the cavity, and r its radius), and where a is given by

$$\frac{a}{h} = \frac{1-\alpha^2}{1+\alpha^2}. \tag{9.57}$$

When $\alpha \to 0$ the radius of the cavity is very small. When $\alpha \to 1$ the radius of the cavity is very large.

The total volume below the settlement trough can be obtained by integrating the vertical displacement of the surface,

$$\Delta V_1 = -\int_{-\infty}^{+\infty} v\,dx. \tag{9.58}$$

With (9.55) this gives, after some elementary substitutions,

$$\frac{2\mu\Delta V_1}{\pi r^2 t} = 4(1-\nu)\,\frac{1+\alpha^2}{1-\alpha^2}. \tag{9.59}$$

9.5 Displacements of the cavity boundary

Another interesting quantity is the displacement of the boundary of the cavity. This can be determined from the equation

$$2\mu(u+iv) = \kappa\phi(\zeta) - \frac{\omega(\zeta)}{\overline{\omega'(\zeta)}}\overline{\phi'(\zeta)} - \overline{\psi(\zeta)}, \tag{9.60}$$

where $\kappa = 3-4\nu$, and now $|\zeta| = \alpha$. Because along this boundary the condition (9.31) is satisfied, it follows that the displacements along this boundary can simply be determined from

$$|\zeta| = 1 \;:\; 2\mu(u+iv) = (\kappa+1)\phi(\zeta) - F(\zeta) - C, \tag{9.61}$$

where F is given by one of the many forms used before, the most simple one being (7.46),

$$F = t(z+ih-r), \tag{9.62}$$

and C is given by (8.53),

$$C = tr. \tag{9.63}$$

With (9.34) it now follows that

$$|\zeta| = \alpha \ : \ \ 2\mu(u + iv) = -(\kappa + 1)ip_1[1 + \alpha^2 - 2\alpha\cos\theta] - t(z + ih). \tag{9.64}$$

Along the boundary $|\zeta| = \alpha$ we have

$$1 + \alpha^2 - 2\alpha\cos\theta = -\frac{1 - \alpha^2}{y/a}, \tag{9.65}$$

see (7.5). Thus, after separation into real and imaginary parts, and using the expression (9.15) for p_1,

$$|\zeta| = \alpha \ : \ \ \frac{2\mu u}{th} = -\frac{x}{h}, \tag{9.66}$$

$$|\zeta| = \alpha \ : \ \ \frac{2\mu v}{th} = -\frac{y + h}{h} + 4(1 - \nu)\,\frac{2\alpha^2}{(1 + \alpha^2)^2}\,\frac{h}{y}. \tag{9.67}$$

The radial displacement of the cavity boundary can be obtained by a simple transformation of coordinates,

$$u_r = u\frac{x}{r} + v\frac{y + h}{r}. \tag{9.68}$$

After some elementary algebra this gives, with (9.66) and (9.67),

$$|\zeta| = \alpha \ : \ \ \frac{2\mu u_r}{tr} = -1 + 2(1 - \nu)\,\frac{h + y}{y}. \tag{9.69}$$

The tangential displacement is

$$u_t = -u\frac{y + h}{r} + v\frac{x}{r}. \tag{9.70}$$

This gives, with (9.66) and (9.67),

$$|\zeta| = \alpha \ : \ \ \frac{2\mu u_t}{tr} = 2(1 - \nu)\,\frac{x}{y}. \tag{9.71}$$

Again the simplicity of the formulas may be noted.

The total volume produced at the cavity can be obtained by integrating the radial displacement along the cavity boundary,

$$\Delta V_2 = -\int_0^{2\pi} u_r\, r\, d\beta, \tag{9.72}$$

where β is the angle around the cavity. With (9.69) this gives

$$\frac{2\mu\Delta V_2}{r^2 t} = 2\pi - 2(1 - \nu)\int_0^{2\pi} \frac{h + y}{y}\, d\beta. \tag{9.73}$$

At the boundary of the cavity we have

$$y = -h + r\sin\beta. \tag{9.74}$$

so that the integral can also be written as

$$\frac{2\mu\Delta V_2}{r^2 t} = 2\pi + 2(1 - \nu)\int_0^{2\pi} \frac{r\sin\beta}{h - r\sin\beta}\, d\beta. \tag{9.75}$$

After elaboration of this integral the result is

$$\frac{2\mu\Delta V_2}{\pi r^2 t} = 2 + 4(1 - \nu)\frac{2\alpha^2}{1 - \alpha^2}. \tag{9.76}$$

For an incompressible material ($\nu = 0.5$) the two volumes ΔV_1 and ΔV_2 are equal, see (9.59) and (9.76). If $\nu \neq 0.5$ the volume change at the surface is larger than the volume change at the cavity boundary, provided that $\alpha < 1$, which is always so. For a very small cavity ($\alpha \to 0$) the volume below the settlement trough is a factor $2(1 - \nu)$ times as large as the volume produced at the cavity. For a very large cavity ($\alpha \to 1$) the two volumes are practically equal, for all values of ν.

9.6 Stresses at the cavity boundary

At the boundary of the cavity the radial normal stress and the shear stress are given ($\sigma_{rr} = t$ and $\sigma_{rt} = 0$). The tangential normal stress σ_{tt} can be determined by calculating the invariant $\sigma_{xx} + \sigma_{yy}$. This quantity is given by eq. (2.93),

$$\sigma_{xx} + \sigma_{yy} = 2\{\phi'(z) + \overline{\phi'(z)}\} = 4\mathrm{Re}\{\phi'(z)\}, \tag{9.77}$$

where $\phi'(z) = d\phi(z)/dz$. This can be calculated from the relation

$$\phi'(z) = \frac{\phi'(\zeta)}{\omega'(\zeta)}. \tag{9.78}$$

From (9.24) and (9.28) it follows that

$$\frac{\phi'(\zeta)}{\omega'(\zeta)} = -\frac{p_1}{2a}(1 - \alpha^2/\zeta^2)(1 - \zeta)^2. \tag{9.79}$$

At the boundary of the cavity we have $\zeta = \alpha\sigma$ or $\zeta = \alpha \exp(i\theta)$. This gives, after some elementary algebraic operations,

$$\mathrm{Re}\{\phi'(z)\} = -\frac{p_1}{a}\sin^2\theta(1 - \alpha^2). \tag{9.80}$$

The coordinates in the z-plane are given by (7.4) and (7.5),

$$x = \frac{2a\alpha\sin\theta}{1 + \alpha^2 - 2\alpha\cos\theta}, \tag{9.81}$$

$$y = -\frac{a(1 - \alpha^2)}{1 + \alpha^2 - 2\alpha\cos\theta}. \tag{9.82}$$

From these equations it follows that

$$\sin\theta = -\frac{1 - \alpha^2}{2\alpha}\,\frac{x}{y}. \tag{9.83}$$

Using this expression, the relations between the geometrical parameters h, a and α, and the expression (9.15) for p_1, the stress invariant becomes

$$\frac{\sigma_{xx} + \sigma_{yy}}{t} = -2\frac{x^2}{y^2}. \tag{9.84}$$

At the cavity surface the radial stress $\sigma_{rr} = t$, so that there

$$\frac{\sigma_{tt}}{t} = -1 - 2\frac{x^2}{y^2}. \tag{9.85}$$

This is a compressive stress, with its smallest value (-1) at the upper and lower points of the cavity, and its largest value at the points where the angle with the vertical is the largest. The simplicity of the formula (9.85) is remarkable.

10. Validation of the solution

In order to validate the solution it has been implemented in a computer program (Jeffery.exe). This program has 3 options: the presentation of numerical data on the screen, the presentation of results in graphical form on the screen and in a printer file, and a number of validations.

The program works interactively, on the basis of values of Poisson's ratio ν and the ratio of the radius of the cavity to its depth (r/h), which must be entered by the user.

The program first calculates the coefficients of the series expansions (taking a maximum of 20 terms), and then calculates stresses and displacements along the boundaries, and presents these on the screen, in the form of tables. The program uses only 3 terms for these calculations, as it has been found in the previous chapter that only 3 terms are unequal to zero. It prints the first 20 coefficients, to demonstrate that all coefficients beyond the third one are indeed equal to zero.

10.1 Numerical results

Numerical results of all the displacements and stresses are presented for values of x and y to be entered by the user. The value of y must be negative because the half plane considered is $y < 0$. The program stops if a positive value of y is entered, or if the point is located inside the tunnel.

10.2 Graphical presentation

The graphical presentation of results consists of contour lines of various variables (displacements or stresses), on the screen and in a datafile. This datafile is in Bitmap format, having the extension *.BMP, or in PiCTeX format, having the extension *.TEX. Using appropriate software this datafile can be plotted.

10.3 Validations

The first validation of the program is the boundary condition at the cavity boundary. The stresses there are calculated, and it is found that the radial stress is indeed 1, and that the shear stress is indeed 0 (both up to six significant numbers). The same is true for the surface tractions along the horizontal upper boundary. It is found that along this boundary $\sigma_{yy} = \sigma_{yx} = 0$. The lateral stress σ_{xx} is not found to be zero, but of course this is not necessary.

By considering points in the complex ζ-plane very close to $\zeta = 1$ it is possible to calculate the displacements and the stresses near infinity. These appear to be zero, as they should be.

The program also shows the displacements along the ground surface, and along the cavity boundary. In both cases the displacements are calculated in two ways: using the series expansion, and using the closed form formulas. The results appear to be identical, which can be seen as a confirmation of the computations.

An interesting quantity is the total volume of the settlement trough. This can be calculated by integrating the vertical displacements along the surface

$$\Delta V = -\int_{-\infty}^{+\infty} v\, dx, \tag{10.1}$$

where the displacements should be determined along the upper boundary $y = 0$. This integral can be transformed into an integral in the ζ-plane, along the unit circle, taking into account the scale factor $|\omega'(\zeta)|$, see (7.16). In this case this factor appears to be

$$|\omega'(\zeta)| = \frac{a}{1-\cos\theta} = \frac{1-\alpha^2}{1+\alpha^2}\,\frac{h}{1-\cos\theta}. \tag{10.2}$$

Thus the integral can be evaluated as

$$\Delta V = \frac{1-\alpha^2}{1+\alpha^2}\, h \int_0^{2\pi} \frac{u_y}{1-\cos\theta}\, d\theta. \tag{10.3}$$

This integral is calculated numerically in the program Jeffery, using Simpson's integration formula, and a subdivision of the total interval into 720 equal parts. The result is compared with the closed form solution (9.59) and with the volume produced at the cavity boundary, as given by (9.76). The relative error is smaller than 1 %.

10.4 Example

The displacements of the entire field, for $\nu = 0.5$ and $r/h = 0.5$, are shown in figure 10.1. In figure 10.2

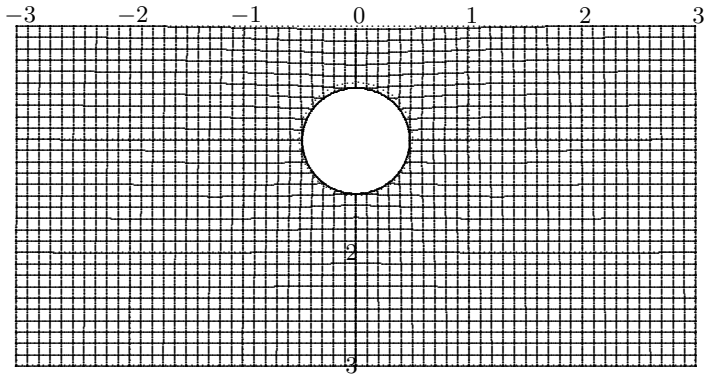

Jeffery : $\nu = 0.5, r/h = 0.5$.

Figure 10.1. Deformations of rectangular mesh.

the displacements are shown for $\nu = 0.0$ and $r/h = 0.5$. The results for $\nu = 0.5$ can be interpreted as the

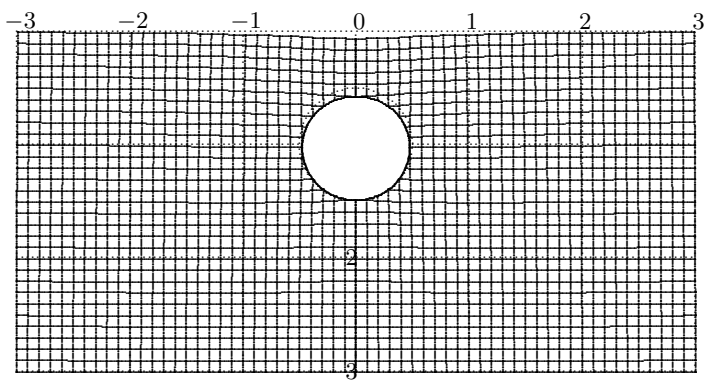

Jeffery : $\nu = 0, r/h = 0.5$.

Figure 10.2. Deformations of rectangular mesh.

initial (undrained) displacements of a consolidating poro-elastic medium. For a smaller (drained) value of ν the displacements are found to increase, as could be expected.

As a further example of the results of the calculations the deformation of the cavity boundary is shown in figure 10.3, in the form of an apparent spring constant (ratio of radial stress and radial displacement)

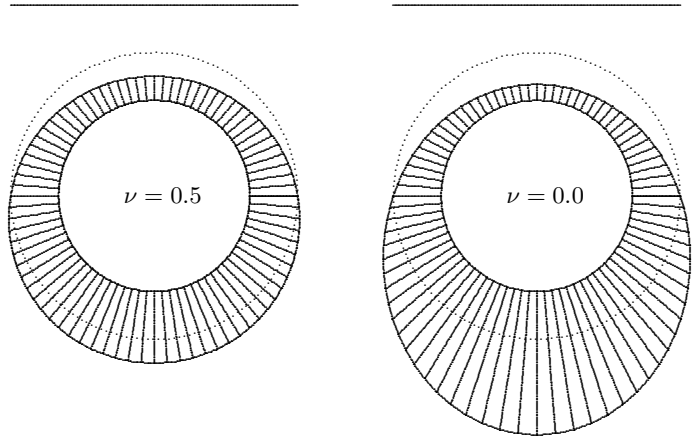

Figure 10.3. Springs for constant stress; $r/h = 0.5$

for $r/h = 0.5$ and two values of Poisson's ratio, $\nu = 0.5$ and $\nu = 0.0$. It may be noted that if $r/h = 0.5$ the ratio of the cover of tunnel to its diameter is $d/D = 0.5$. In this case of a rather shallow tunnel, with a small covering depth, the tunnel appears to be so close to the upper surface that the spring constant above the tunnel is considerably smaller than the one below it. It may be noted that the horizontal line above the graph indicates the location of the upper surface, if the fully drawn inner circle is considered as the radius of the tunnel.

The figure indicates that during consolidation the spring constant at the bottom increases, so that during consolidation the vertical displacement of the bottom will decrease. At the top of the cavity the spring constant decreases, so that the displacement at the top will increase. These results are in agreement with those shown in the figures 10.2 and 10.1.

Figure 10.4 shows the values of the apparent spring constant for $r/h = 0.3333$ and two values of Poisson's ratio. In this case the ratio of cover to diameter is $d/D = 1.0$, indicating that the covering

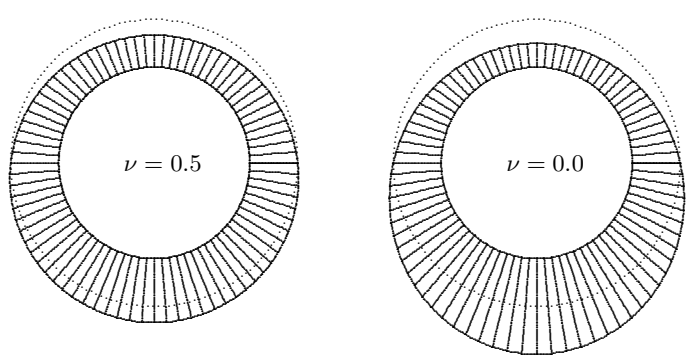

Figure 10.4. Springs for constant stress; $r/h = 0.3333$

depth of soil above the tunnel is equal to the diameter of the tunnel.

Figure 10.5 shows the values of the apparent spring constant for $r/h = 0.25$ and two values of Poisson's ratio. In this case the ratio of cover to diameter is $d/D = 1.5$. It appears that in this case of a rather

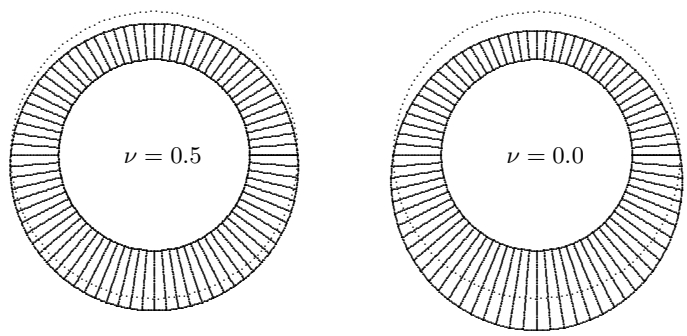

Figure 10.5. Springs for constant stress; $r/h = 0.25$

deep tunnel, with a relatively large cover, the distribution of the springs constants is almost uniform.

11. Second boundary value problem

In this chapter the problem of an elastic half plane with a circular cavity is investigated, for the case that along the boundary of the cavity the displacements are prescribed.

The complex stress functions $\phi(\zeta)$ and $\psi(\zeta)$ are again represented by their Laurent series expansions,

$$\phi(\zeta) = a_0 + \sum_{k=1}^{\infty} a_k \zeta^k + \sum_{k=1}^{\infty} b_k \zeta^{-k}, \tag{11.1}$$

$$\psi(\zeta) = c_0 + \sum_{k=1}^{\infty} c_k \zeta^k + \sum_{k=1}^{\infty} d_k \zeta^{-k}, \tag{11.2}$$

These series expansions will converge up to the boundaries $|\zeta| = 1$ and $|\zeta| = \alpha$. The coefficients a_k, b_k, c_k and d_k must be determined from the boundary conditions.

11.1 Outer boundary

The boundary condition along the outer boundary ($|\zeta| = 1$) is again that it is free of stress, as in the previous chapter. This means that the coefficients c_k and d_k can again be expressed into a_k and b_k by the relations (8.14) – (8.16). These relations are

$$c_0 = -\overline{a}_0 - \tfrac{1}{2}a_1 - \tfrac{1}{2}b_1, \tag{11.3}$$

$$c_k = -\overline{b}_k - \tfrac{1}{2}(k+1)a_{k+1} + \tfrac{1}{2}(k-1)a_{k-1}, \qquad k = 1, 2, 3, \ldots, \tag{11.4}$$

$$d_k = -\overline{a}_k + \tfrac{1}{2}(k-1)b_{k-1} - \tfrac{1}{2}(k+1)b_{k+1}, \qquad k = 1, 2, 3, \ldots, \tag{11.5}$$

One half of the unknown coefficients have now been expressed into the other half. It may be noted that for $k = 1$ the last two expressions each contain a non-existing term, but with a factor 0. If the coefficients a_k and b_k can be found, the determination of c_k and d_k is explicit and straightforward.

11.2 Inner boundary

At the inner boundary the displacements are supposed to be prescribed. The appropriate form of the boundary condition is given by (2.95),

$$G = 2\mu(u_x + iu_y) = \kappa\phi(z) - z\overline{\phi'(z)} - \overline{\psi(z)}, \tag{11.6}$$

where for plane strain

$$\kappa = \frac{\lambda + 3\mu}{\lambda + \mu} = 3 - 4\nu. \tag{11.7}$$

and for plane stress

$$\kappa = \frac{5\lambda + 6\mu}{3\lambda + 2\mu} = \frac{3 - \nu}{1 + \nu}. \tag{11.8}$$

Compared to the boundary condition for the surface tractions, the only differences are the factor κ in the first term, and the sign of the second and third terms. This means that the derivation can be copied with small modifications from the previous chapters. Again all terms are multiplied by a factor $(1 - \alpha\sigma)$, so that the modified boundary condition is, by analogy with (8.18),

$$G'(\zeta_0) = \kappa T_1(\zeta_0) - T_2(\zeta_0) - T_3(\zeta_0), \tag{11.9}$$

where

$$G'(\zeta_0) = (1 - \zeta_0)G(\zeta_0) = 2\mu(1 - \alpha\sigma)(u_x + iu_y), \tag{11.10}$$

and, just as in the previous chapter,

$$T_1(\zeta_0) = (1-\zeta_0)\phi(\zeta_0), \tag{11.11}$$

$$T_2(\zeta_0) = (1-\zeta_0)\frac{\omega(\zeta_0)}{\overline{\omega'(\zeta_0)}}\,\overline{\phi'(\zeta_0)}, \tag{11.12}$$

$$T_3(\zeta_0) = (1-\zeta_0)\overline{\psi(\zeta_0)}. \tag{11.13}$$

The three terms have been elaborated in the previous chapter. The result for the term T_1 is, from (8.28),

$$T_1(\zeta_0) = a_0 + \sum_{k=1}^{\infty}(a_k - a_{k-1})\alpha^k\sigma^k + \sum_{k=0}^{\infty}(b_k - b_{k+1})\alpha^{-k}\sigma^{-k}. \tag{11.14}$$

The sum of terms T_2 and T_3 is, from (8.40),

$$\begin{aligned} T_2(\zeta_0) + T_3(\zeta_0) = -a_0 \\ &+ \sum_{k=0}^{\infty}\big[(1-\alpha^2)k\overline{a}_k - (1-\alpha^2)(k+1)\overline{a}_{k+1} - b_k + \alpha^2 b_{k+1}\big]\alpha^k\sigma^{-k} \\ &+ \sum_{k=1}^{\infty}\big[(1-\alpha^2)(k-1)\overline{b}_{k-1} - (1-\alpha^2)k\overline{b}_k + \alpha^2 a_{k-1} - a_k\big]\alpha^{-k}\sigma^k, \end{aligned} \tag{11.15}$$

where it has been assumed that $b_0 = 0$, see (8.27).

11.2.1 Terms 1, 2 and 3

The right hand side of the expression (11.9) now is, with (11.14) and (11.15),

$$\begin{aligned} \kappa T_1(\zeta_0) - T_2(\zeta_0) - T_3(\zeta_0) = a_0(\kappa+1) \\ &+ \sum_{k=0}^{\infty}\big[-(1-\alpha^2)k\overline{a}_k + (1-\alpha^2)(k+1)\overline{a}_{k+1} \\ &\qquad -(\alpha^2 + \kappa\alpha^{-2k})b_{k+1} + (1+\kappa\alpha^{-2k})b_k\big]\alpha^k\sigma^{-k} \\ &+ \sum_{k=1}^{\infty}\big[-(1-\alpha^2)(k-1)\overline{b}_{k-1} + (1-\alpha^2)k\overline{b}_k \\ &\qquad -(\alpha^2 + \kappa\alpha^{2k})a_{k-1} + (1+\kappa\alpha^{2k})a_k\big]\alpha^{-k}\sigma^k. \end{aligned} \tag{11.16}$$

Again it appears that in this expression only two levels of coefficients occur in each equation: $k-1$ and k or k and $k+1$.

11.2.2 The boundary condition for the ground loss problem

According to the modified boundary condition (11.9) the value of the expression (11.16) must be equal to $G'(\zeta_0)$. The precise form of this condition depends upon the nature of the prescribed displacements. For the case of the ground loss problem we have, from (7.40) and (11.10),

$$G'(\sigma) = -2i\mu u_0(\alpha - \sigma), \tag{11.17}$$

which shows that there are only two non-zero terms, for the powers σ^0 and σ^1.

The coefficient of the powers σ^{-k} must be zero, for $k = 1, 2, 3, \ldots$. Hence

$$(1-\alpha^2)k\overline{a}_k - (1-\alpha^2)(k+1)\overline{a}_{k+1} \\ +(\alpha^2 + \kappa\alpha^{-2k})b_{k+1} - (1+\kappa\alpha^{-2k})b_k = 0, \quad k = 1, 2, 3, \ldots. \tag{11.18}$$

Furthermore, the coefficient of the powers σ^k must be zero, for $k = 2, 3, 4, \ldots$. This gives

$$(1-\alpha^2)(k-1)\overline{b}_{k-1} - (1-\alpha^2)k\overline{b}_k \\ +(\alpha^2 + \kappa\alpha^{2k})a_{k-1} - (1+\kappa\alpha^{2k})a_k = 0, \quad k = 2, 3, 4, \ldots. \tag{11.19}$$

If in this expression k is replaced by $k+1$, it can also be written as

$$(1-\alpha^2)k\overline{b}_k - (1-\alpha^2)(k+1)\overline{b}_{k+1} \\ +(\alpha^2 + \kappa\alpha^{2k+2})a_k - (1+\kappa\alpha^{2k+2})a_{k+1} = 0, \quad k = 1, 2, 3, \ldots. \tag{11.20}$$

Using the two equations (11.18) and (11.20) the two coefficients a_{k+1} and b_{k+1} can be expressed into a_k and b_k, starting from $k = 1$.

For the evaluation of the coefficients the equations can perhaps better be rewritten as follows.

$$(1-\alpha^2)(k+1)a_{k+1} - (\alpha^2 + \kappa\alpha^{-2k})\overline{b}_{k+1} = \\ = (1-\alpha^2)ka_k - (1+\kappa\alpha^{-2k})\overline{b}_k, \quad k = 1, 2, 3, \ldots. \tag{11.21}$$

$$(1+\kappa\alpha^{2k+2})a_{k+1} + (1-\alpha^2)(k+1)\overline{b}_{k+1} = \\ = (\alpha^2 + \kappa\alpha^{2k+2})a_k + (1-\alpha^2)k\overline{b}_k, \quad k = 1, 2, 3, \ldots. \tag{11.22}$$

From these two equations the coefficients can be determined recursively.

The starting values, a_1 and b_1, may be determined from the coefficients of the powers σ^0 and σ^1. This gives

$$(1-\alpha^2)\overline{a}_1 - (\kappa + \alpha^2)b_1 = -2i\mu u_0\alpha - (\kappa+1)a_0, \tag{11.23}$$

$$(1-\alpha^2)\overline{b}_1 + (1+\kappa\alpha^2)a_1 = 2i\mu u_0\alpha + (\kappa+1)\alpha^2 a_0. \tag{11.24}$$

The coefficient a_0 is still undetermined in this stage. It represents a rigid body displacement, which may be related to the displacement at infinity. It is assumed that its value is to be determined from the condition that the coefficients in the Laurent series tend towards zero for large values of k. This condition may mean that the stresses are supposed to vanish at infinity.

It is assumed, on the basis of a consideration of symmetry, that all coefficients are purely imaginary, so that taking the complex conjugate corresponds to multiplication by -1.

The solution of the system of two equations is

$$a_1 = \frac{2i\mu u_0\alpha}{1 + (\kappa-1)\alpha^2 + \alpha^4} + a_0, \tag{11.25}$$

$$b_1 = \frac{2i\mu u_0\alpha^3}{1 + (\kappa-1)\alpha^2 + \alpha^4} + a_0. \tag{11.26}$$

Thus the first two coefficients have been determined. The other coefficients can next be calculated successively.

It may be noted that the system of equations formally admits a uniform solution

$$a_k = b_k = a_0, \qquad k = 1, 2, 3, \ldots. \tag{11.27}$$

This solution does not converge in the ring in the ζ-plane. The first series converges inside the unit circle, and is then equal to $a_0/(1-\zeta)$. The second series converges outside the unit circle, and is then equal to $-a_0/(1-\zeta)$.

12. Elaboration of the solution

In this chapter the ground loss problem will be further evaluated, in order to be able to validate the solution, and to obtain numerical values.

12.1 Calculation of the coefficients

It is assumed that all the coefficients are purely imaginary, because of the symmetry of the problem. Therefore we will write

$$a_k = 2i\mu u_0 p_k, \tag{12.1}$$

$$b_k = 2i\mu u_0 q_k, \tag{12.2}$$

$$c_k = 2i\mu u_0 r_k, \tag{12.3}$$

$$d_k = 2i\mu u_0 s_k. \tag{12.4}$$

It is assumed that the coefficient p_0 can be determined later. For the moment it is left as a parameter. The first two coefficients p_1 and q_1 now are, with (11.25) and (11.26),

$$p_1 = p_0 + \frac{\alpha}{1 + (\kappa - 1)\alpha^2 + \alpha^4}, \tag{12.5}$$

$$q_1 = p_0 + \frac{\alpha^3}{1 + (\kappa - 1)\alpha^2 + \alpha^4}. \tag{12.6}$$

The remaining coefficients p_k and q_k have to be determined from the equations (11.21) and (11.22), which give

$$\begin{aligned}(1-\alpha^2)(k+1)p_{k+1} + (\alpha^2 + \kappa\alpha^{-2k})q_{k+1} &= \\ = (1-\alpha^2)kp_k + (1+\kappa\alpha^{-2k})q_k, &\quad k = 1, 2, 3, \ldots.\end{aligned} \tag{12.7}$$

$$\begin{aligned}(1+\kappa\alpha^{2k+2})p_{k+1} - (1-\alpha^2)(k+1)q_{k+1} &= \\ = (\alpha^2 + \kappa\alpha^{2k+2})p_k - (1-\alpha^2)kq_k, &\quad k = 1, 2, 3, \ldots.\end{aligned} \tag{12.8}$$

This system of equations can best be solved numerically. The form of the system of equations is not very well suited for such a solution, however, because some of the coefficients are unbounded if $k \to \infty$, noting that $\alpha < 1$. Therefore they can better be re-arranged and rewritten as follows,

$$\begin{aligned}(1+\kappa\alpha^{2k+2})p_{k+1} - (1-\alpha^2)(k+1)q_{k+1} &= \\ = (\alpha^2 + \kappa\alpha^{2k+2})p_k - (1-\alpha^2)kq_k, &\quad k = 1, 2, 3, \ldots.\end{aligned} \tag{12.9}$$

$$\begin{aligned}(1-\alpha^2)(k+1)\alpha^{2k}p_{k+1} + (\kappa + \alpha^{2k+2})q_{k+1} &= \\ = (1-\alpha^2)k\alpha^{2k}p_k + (\kappa + \alpha^{2k})q_k, &\quad k = 1, 2, 3, \ldots.\end{aligned} \tag{12.10}$$

Written in this form the terms remain finite when $k \to \infty$, and the terms on the main diagonal do not tend towards zero.

The system of equations can now be solved in successive steps, starting from an assumed value of p_0. It is postulated that the value of p_0 must be determined from the condition that for very large values of k the coefficients p_k must tend towards zero. Because all the coefficients depend linearly upon p_0 this coefficient can now easily be determined by first assuming $p_0 = 0$, calculating the last term p_n, then assuming $p_0 = 1$, again calculating p_n, and then finally determining the correct value of p_0 by linear interpolation. It has been found that this works satisfactorily, provided that the number of terms (n) is large enough.

The coefficients r_k and s_k can be determined using the relations (11.3) – (11.5) and (12.3) and (12.4). This gives

$$r_0 = p_0 - \tfrac{1}{2}p_1 - \tfrac{1}{2}q_1, \tag{12.11}$$

$$r_k = q_k - \tfrac{1}{2}(k+1)p_{k+1} + \tfrac{1}{2}(k-1)p_{k-1}, \qquad k = 1, 2, 3, \ldots, \tag{12.12}$$

$$s_k = p_k - \tfrac{1}{2}(k+1)q_{k+1} + \tfrac{1}{2}(k-1)q_{k-1}, \qquad k = 1, 2, 3, \ldots. \tag{12.13}$$

All the coefficients now are known, so that the solution can be further elaborated.

12.2 The stress functions

The stress functions are, from (11.1) and (11.2),

$$\phi(\zeta) = a_0 + \sum_{k=1}^{n} a_k \zeta^k + \sum_{k=1}^{n} b_k \zeta^{-k}, \tag{12.14}$$

$$\psi(\zeta) = c_0 + \sum_{k=1}^{n} c_k \zeta^k + \sum_{k=1}^{n} d_k \zeta^{-k}, \tag{12.15}$$

With (12.1) – (12.4) this can be rewritten as

$$\frac{\phi(\zeta)}{2\mu u_0} = ip_0 + i\sum_{k=1}^{n} p_k \zeta^k + i\sum_{k=1}^{n} q_k \zeta^{-k}, \tag{12.16}$$

$$\frac{\psi(\zeta)}{2\mu u_0} = ir_0 + i\sum_{k=1}^{n} r_k \zeta^k + i\sum_{k=1}^{n} s_k \zeta^{-k}, \tag{12.17}$$

In general one may write $\zeta = \rho \exp(i\theta)$. Separation into real and imaginary parts then gives

$$\frac{\mathrm{Re}\{\phi(\zeta)\}}{2\mu u_0} = -\sum_{k=1}^{n} p_k \rho^k \sin(k\theta) + \sum_{k=1}^{n} q_k \rho^{-k} \sin(k\theta), \tag{12.18}$$

$$\frac{\mathrm{Im}\{\phi(\zeta)\}}{2\mu u_0} = p_0 + \sum_{k=1}^{n} p_k \rho^k \cos(k\theta) + \sum_{k=1}^{n} q_k \rho^{-k} \cos(k\theta), \tag{12.19}$$

$$\frac{\mathrm{Re}\{\psi(\zeta)\}}{2\mu u_0} = -\sum_{k=1}^{n} r_k \rho^k \sin(k\theta) + \sum_{k=1}^{n} s_k \rho^{-k} \sin(k\theta), \tag{12.20}$$

$$\frac{\mathrm{Im}\{\psi(\zeta)\}}{2\mu u_0} = r_0 + \sum_{k=1}^{n} r_k \rho^k \cos(k\theta) + \sum_{k=1}^{n} s_k \rho^{-k} \cos(k\theta), \tag{12.21}$$

For the evaluation of the stresses and the displacements the derivatives are also needed. These are

$$\phi'(\zeta) = \sum_{k=1}^{n} a_k k \zeta^{k-1} - \sum_{k=1}^{n} b_k k \zeta^{-k-1}, \tag{12.22}$$

$$\phi''(\zeta) = \sum_{k=2}^{n} a_k k(k-1) \zeta^{k-2} + \sum_{k=1}^{n} b_k k(k+1) \zeta^{-k-2}, \tag{12.23}$$

$$\psi'(\zeta) = \sum_{k=1}^{n} c_k k \zeta^{k-1} - \sum_{k=1}^{n} d_k k \zeta^{-k-1}. \tag{12.24}$$

Written in terms of the dimensionless coefficients these formulas are

$$\frac{\phi'(\zeta)}{2\mu u_0} = i\sum_{k=1}^{n} p_k k\zeta^{k-1} - i\sum_{k=1}^{n} q_k k\zeta^{-k-1}, \tag{12.25}$$

$$\frac{\phi''(\zeta)}{2\mu u_0} = i\sum_{k=2}^{n} p_k k(k-1)\zeta^{k-2} + i\sum_{k=1}^{n} q_k k(k+1)\zeta^{-k-2}, \tag{12.26}$$

$$\frac{\psi'(\zeta)}{2\mu u_0} = i\sum_{k=1}^{n} r_k k\zeta^{k-1} - i\sum_{k=1}^{n} s_k k\zeta^{-k-1}. \tag{12.27}$$

The real and imaginary parts of these functions are

$$\begin{aligned}\frac{\mathrm{Re}\{\phi'(\zeta)\}}{2\mu u_0} = &-\sum_{k=1}^{n} p_k k\rho^{k-1}\sin[(k-1)\theta] \\ &-\sum_{k=1}^{n} q_k k\rho^{-k+1}\sin[(k+1)\theta],\end{aligned} \tag{12.28}$$

$$\begin{aligned}\frac{\mathrm{Im}\{\phi'(\zeta)\}}{2\mu u_0} = &\sum_{k=1}^{n} p_k k\rho^{k-1}\cos[(k-1)\theta] \\ &-\sum_{k=1}^{n} q_k k\rho^{-k-1}\cos[(k+1)\theta],\end{aligned} \tag{12.29}$$

$$\begin{aligned}\frac{\mathrm{Re}\{\phi''(\zeta)\}}{2\mu u_0} = &-\sum_{k=2}^{n} p_k k(k-1)\rho^{k-2}\sin[(k-2)\theta] \\ &+\sum_{k=1}^{n} q_k k(k+1)\rho^{-k-2}\sin[(k+2)\theta],\end{aligned} \tag{12.30}$$

$$\begin{aligned}\frac{\mathrm{Im}\{\phi''(\zeta)\}}{2\mu u_0} = &\sum_{k=2}^{n} p_k k(k-1)\rho^{k-2}\cos[(k-2)\theta] \\ &+\sum_{k=1}^{n} q_k k(k+1)\rho^{-k-2}\cos[(k+2)\theta],\end{aligned} \tag{12.31}$$

$$\begin{aligned}\frac{\mathrm{Re}\{\psi'(\zeta)\}}{2\mu u_0} = &-\sum_{k=1}^{n} r_k k\rho^{k-1}\sin[(k-1)\theta] \\ &-\sum_{k=1}^{n} s_k k\rho^{-k-1}\sin[(k+1)\theta],\end{aligned} \tag{12.32}$$

$$\begin{aligned}\frac{\mathrm{Im}\{\psi'(\zeta)\}}{2\mu u_0} = &\sum_{k=1}^{n} r_k k\rho^{k-1}\cos[(k-1)\theta] \\ &-\sum_{k=1}^{n} s_k k\rho^{-k-1}\cos[(k+1)\theta],\end{aligned} \tag{12.33}$$

This completes the calculation of the stress functions and their derivatives with respect to ζ.

12.3 The coordinates

In order to verify and determine the stresses and displacements, the location in the ζ-plane, as defined by ρ and θ, must be transformed into the z-plane. This can be done by the conformal transformation (7.1)

$$z = \omega(\zeta) = -ia\frac{1+\zeta}{1-\zeta}, \tag{12.34}$$

where a is a given length, which is related to the depth h of the tunnel by the relation (7.11)

$$h = a\frac{1+\alpha^2}{1-\alpha^2}. \tag{12.35}$$

Elimination of a from these two relations gives the conformal transformation in terms of the depth h,

$$\frac{z}{h} = -i\frac{1-\alpha^2}{1+\alpha^2}\,\frac{1+\zeta}{1-\zeta}. \tag{12.36}$$

The real and imaginary parts of this expression are, with $\zeta = \rho\exp(i\theta)$,

$$\frac{x}{h} = \frac{1-\alpha^2}{1+\alpha^2}\,\frac{2\rho\sin\theta}{1+\rho^2-2\rho\cos\theta}, \tag{12.37}$$

$$\frac{y}{h} = -\frac{1-\alpha^2}{1+\alpha^2}\,\frac{1-\rho^2}{1+\rho^2-2\rho\cos\theta}. \tag{12.38}$$

This enables to determine x and y. The parameter h is used as a scaling factor for all quantities in the z-plane. Because all the coefficients appear to be proportional to the displacement u_0 of the cavity, all the displacements are expressed in terms of u_x/u_0 and u_y/u_0. The coordinates, however, are expressed as x/h and y/h. The stresses are expressed in terms of $2\mu u_0/h$.

12.4 Derivatives with respect to z

In the expressions for the displacements and the stresses the derivatives with respect to z appear. Their relation with the derivatives with respect to ζ can be derived as follows.

The chain rule of differentiation gives

$$\frac{df}{d\zeta} = \frac{df}{dz}\,\frac{dz}{d\zeta} = \omega'(\zeta)\,\frac{df}{dz}. \tag{12.39}$$

Differentiating once more gives

$$\frac{d^2f}{d\zeta^2} = \frac{df}{dz}\,\frac{d^2z}{d\zeta^2} + \frac{d^2f}{dz^2}\left(\frac{dz}{d\zeta}\right)^2 = \omega''(\zeta)\,\frac{df}{dz} + [(\omega'(\zeta)]^2\,\frac{d^2f}{dz^2}. \tag{12.40}$$

From these equations it follows that

$$\frac{df}{dz} = \frac{1}{\omega'(\zeta)}\,\frac{df}{d\zeta}, \tag{12.41}$$

$$\frac{d^2f}{dz^2} = \frac{1}{[\omega'(\zeta)]^2}\,\frac{d^2f}{d\zeta^2} - \frac{\omega''(\zeta)}{[\omega'(\zeta)]^2}\,\frac{df}{dz}. \tag{12.42}$$

Thus the derivatives with respect to z can be obtained from those with respect to ζ by algebraic operations involving the derivatives of the mapping function.

The mapping functions is, with (12.34)

$$z = \omega(\zeta) = -ia\frac{1+\zeta}{1-\zeta}. \tag{12.43}$$

From this it follows that

$$W_1 = \frac{1}{\omega'(\zeta)} = \frac{i}{2a}(1-\zeta)^2, \tag{12.44}$$

and

$$W_2 = \frac{\omega''(\zeta)}{[\omega'(\zeta)]^2} = \frac{i}{a}(1-\zeta). \tag{12.45}$$

These factors can easily be separated into real and imaginary parts, so that multiplication by them can easily be performed. In the computations care has to be taken that all quantities are correctly expressed in terms of the length parameter h, rather than a. This requires multiplication by a constant factor, see (12.35).

13. Validation of the solution

In order to validate the solution it has been implemented in a computer program (GroundLoss). This program has 3 options: the presentation of numerical data on the screen, the presentation of results in graphical form on the screen and in an HPGL file, and a number of validations.

The program works interactively, on the basis of values of Poisson's ratio ν and the ratio of the radius of the cavity to its depth (r/h), which must be entered by the user.

The program first calculates the coefficients of the series expansions (taking a maximum of nn terms), and then calculates stresses and displacements along the boundaries, and presents them on the screen, in the form of tables. This enables to verify whether the boundary conditions are indeed satisfied. In the program the value of nn has been taken as 10000. This is usually much too large for sufficient convergence.

A special problem is the determination of the constant a_0, which is not explicitly determined by the two boundary conditions. It has been found that when an arbitrary value of a_0 is used as a starting value, all the coefficients p_k and q_k become equal (and unequal to zero) for large values of k. This suggests to determine the precise value of a_0 such that these coefficients tend towards zero for $k \to \infty$. This appears to work well. The actual procedure used is to first assume $a_0 = 0$, calculate the last coefficient q_{nn}, repeat the calculations with $a_0 = 1$, again calculate the last coefficient q_{nn}, and then determine the value of a_0 by linear interpolation, such that $q_{nn} = 0$. Because of the linearity of the system this should work well, as indeed it appears to do.

A numerical difficulty may arise in the computations because some of the terms require the calculation of terms of the type $k(k+1)\alpha^{-k}q_k$, where $\alpha < 1$ and k may be very large. A small error in the actual coefficient q_k, even when it is very close to zero, may then lead to a large error in the value of the term itself, because $k(k+1)\alpha^{-k}$ is so very large. In order to eliminate this difficulty all the series have been cut off beyond the term for which the coefficient q_k is smaller than 10^{-14}. For a very small cavity this is found to mean that only a few terms are needed; for a very large cavity it is found that several hundreds of terms have to be taken into account. This is determined in the program.

13.1 Numerical results

Numerical results of all the displacements and stresses are presented for values of x and y to be entered by the user. The value of y must be negative because the half plane considered is $y < 0$. The program stops if a positive value of y is entered, or if the point is located inside the tunnel.

13.2 Graphical presentation

The graphical presentation of results consists of contour lines of various variables (displacements or stresses), on the screen and in a datafile. This datafile is in HPGL format, having the extension *.PLT. Using appropriate software this datafile can be plotted.

13.3 Validations

The first validation of the program is the boundary condition at the cavity boundary. The displacements there are calculated, and it is found that the radial displacement is indeed -1, and that the tangential displacement is indeed 0 (both up to six significant numbers). The same is true for the surface tractions along the horizontal upper boundary. It is found that along this boundary $\sigma_{yy} = \sigma_{yx} = 0$. The lateral stress σ_{xx} is not found to be zero, but of course this is not necessary.

By considering points in the complex ζ-plane very close to $\zeta = 1$ it is possible to calculate the stresses near infinity. These appear to be zero, as they should be.

In the same way, by taking $\zeta = 1 + \varepsilon$, with $|\varepsilon| \ll 1$, it is possible to calculate the displacements near infinity. It is found that the horizontal displacement is zero, but that the vertical displacement is unequal to zero. Although this may be somewhat unexpected, it seems to be very well possible, because of the conditions that the displacements at the cavity boundary are rigidly imposed, and the stresses at

infinity have been assumed to vanish. It has been verified that this displacement at infinity is uniform, by checking the displacements at a great number of points, for various complex values of ε. It appears that a contraction of the cavity (a positive ground loss in tunnel engineering) leads to an upward displacement at infinity. Of course a rigid body displacement of the entire half plane, including the cavity, can take place without inducing any stresses. Thus the displacement at infinity can be made equal to zero by subtracting a constant from all displacements. This means that the cavity itself will also undergo this rigid body displacement. It can be concluded that a contracting cavity will undergo a downward displacement, with respect to the points at infinity.

The program GroundLoss also shows the stresses along the cavity boundary. It appears that the radial stresses are not uniformly distributed, as they are in an infinite medium, or if $r/h \to 0$, but that the radial stress is larger than average near the bottom, and smaller than average near the top of the tunnel. This does not mean that there is a resulting force, however, because this is also determined by the shear stresses. Actually, the validating part of the program GroundLoss also calculates the resulting force of the surface tractions along the cavity boundary, by numerical integration. This resulting force is indeed found to be zero.

An interesting quantity is the total volume of the settlement trough. This can be calculated by integrating the vertical displacements along the surface

$$\Delta V = -\int_{-\infty}^{+\infty} v\, dx, \tag{13.1}$$

where the displacements should be determined along the upper boundary $y = 0$. This integral can be transformed into an integral in the ζ-plane, along the unit circle, taking into account the scale factor $|\omega'(\zeta)|$, see (7.16). In this case this factor appears to be

$$|\omega'(\zeta)| = \frac{a}{1-\cos\theta} = \frac{1-\alpha^2}{1+\alpha^2}\,\frac{h}{1-\cos\theta}. \tag{13.2}$$

Thus the integral can be evaluated as

$$\Delta V = -\frac{1-\alpha^2}{1+\alpha^2}\, h \int_0^{2\pi} \frac{v}{1-\cos\theta}\, d\theta. \tag{13.3}$$

This integral is calculated numerically in the program GroundLoss, using Simpson's integration formula, and a subdivision of the total interval into 1000 equal parts.

The result may be compared with the total ground loss at the circumference of the cavity,

$$\Delta V_0 = 2\pi r u_0 = 4\pi h u_0 \frac{\alpha}{1+\alpha^2}. \tag{13.4}$$

It seems natural to assume that for an incompressible material (i.e. for $\nu = 0.5$) these two values must be equal. This is indeed obtained by running the program, with a relative error smaller than 1 %.

For smaller values of Poisson's ratio it appears that the total volume below the settlement trough is larger than the total ground loss. This property is also predicted by the approximate method of Sagaseta (1987), which was generalized by Verruijt & Booker (1996). This approximate method gives

$$\Delta V = 2(1-\nu)\Delta V_0. \tag{13.5}$$

The calculations using the program GroundLoss do not confirm this result. Actually the ratio $\Delta V/\Delta V_0$ appears to be smaller than $2(1-\nu)$ in the exact solution. Only for very small tunnels it is found that the results of the approximate solution and the exact solution are practically identical, for all values of Poisson's ratio.

13.4 Examples

Some examples of the results of the calculations are shown below, for instance the deformations of the mesh, see figures 13.1 and 13.2. These two figures show the displacements of the tunnel as a whole for $\nu = 0.5$ and $\nu = 0.0$. It can be seen from the figures that the vertical displacement of the surface

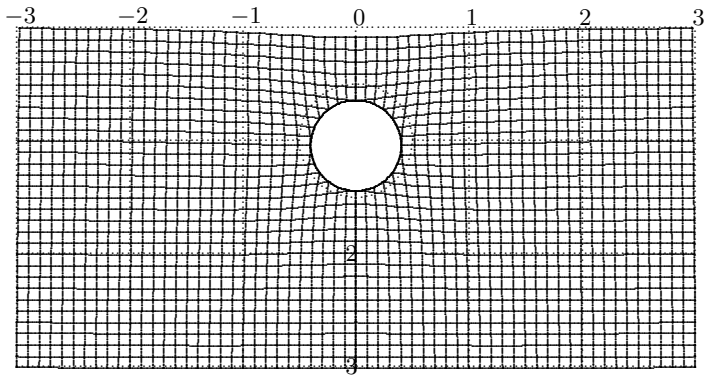

GroundLoss : $\nu = 0.5, r/h = 0.5$.

Figure 13.1. Deformations of rectangular mesh.

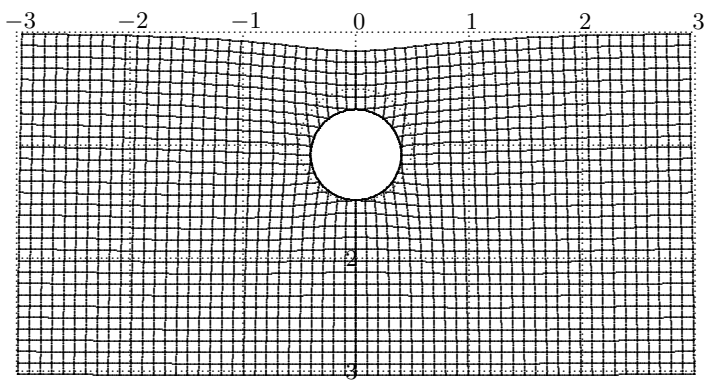

GroundLoss : $\nu = 0, r/h = 0.5$.

Figure 13.2. Deformations of rectangular mesh.

increases when ν decreases from 0.5 to 0.0, as may occur during consolidation of a porous elastic material.

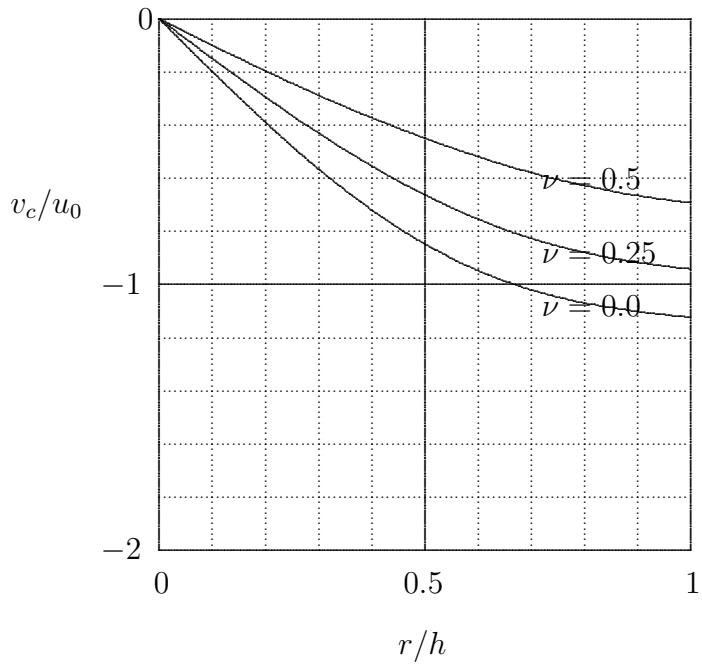

Figure 13.3. Vertical displacement of tunnel

Figure 13.3 shows the average vertical displacement of the tunnel as a whole, as a function of ν and r/h. It appears that for small values of r/h the displacement of the tunnel is practically zero. This case corresponds to the case of a tunnel in an infinite medium, in which there is indeed no average displacement. For larger values of r/h (or, in other words, tunnels closer to the soil surface) there is a marked vertical displacement of the tunnel. Its value is negative, indicating a downward displacement. For certain combinations of ν and r/h the displacement may even be larger than twice the imposed radial displacement.

Figure 13.4 shows the vertical displacement of the bottom of the tunnel. This displacement is usually upward, but because of the average downward displacement of the tunnel, the displacement of the bottom is always smaller than the value u_0. For large values of r/h the displacement may even be negative, i.e. downward. It may be noted that this figure is actually identical to figure 13.3, because the displacement of the bottom is equal to the average displacement of the tunnel plus the constant value u_0, the imposed radial displacement.

Figure 13.5 shows the vertical displacement of the top of the tunnel. This displacement is equal to the average displacement of the tunnel, shown in figure 13.3, minus the constant value u_0. This is is indicated by the fact that the figures 13.3 and 13.5 differ only in the vertical scale.

Figure 13.6 shows the vertical displacement of the origin of the coordinate system, the point $x = 0$, $y = 0$. This is the point of the soil surface directly above the tunnel. This displacement is the deepest point of the settlement trough at the soil surface.

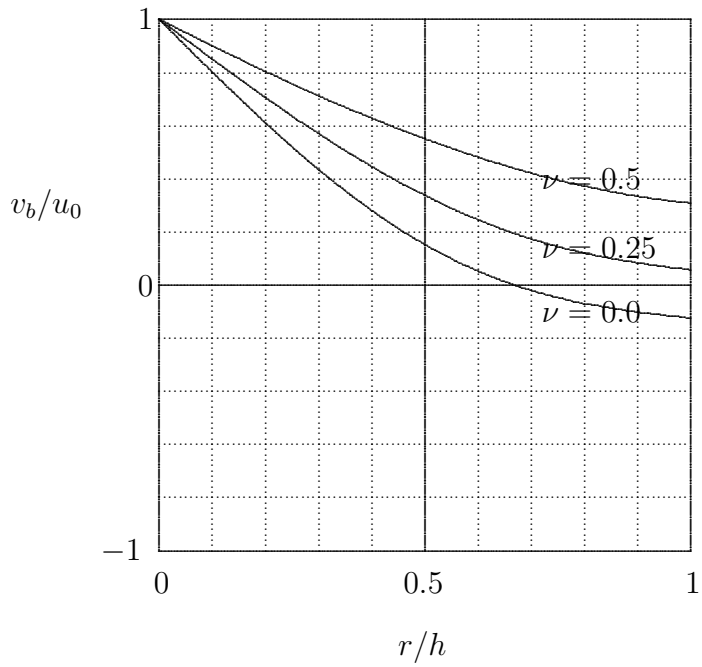

Figure 13.4. Vertical displacement of bottom

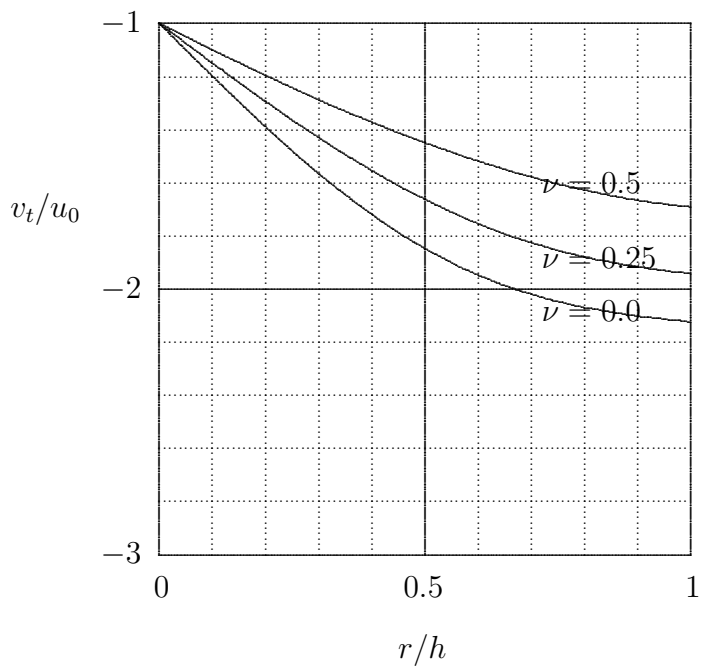

Figure 13.5. Vertical displacement of top

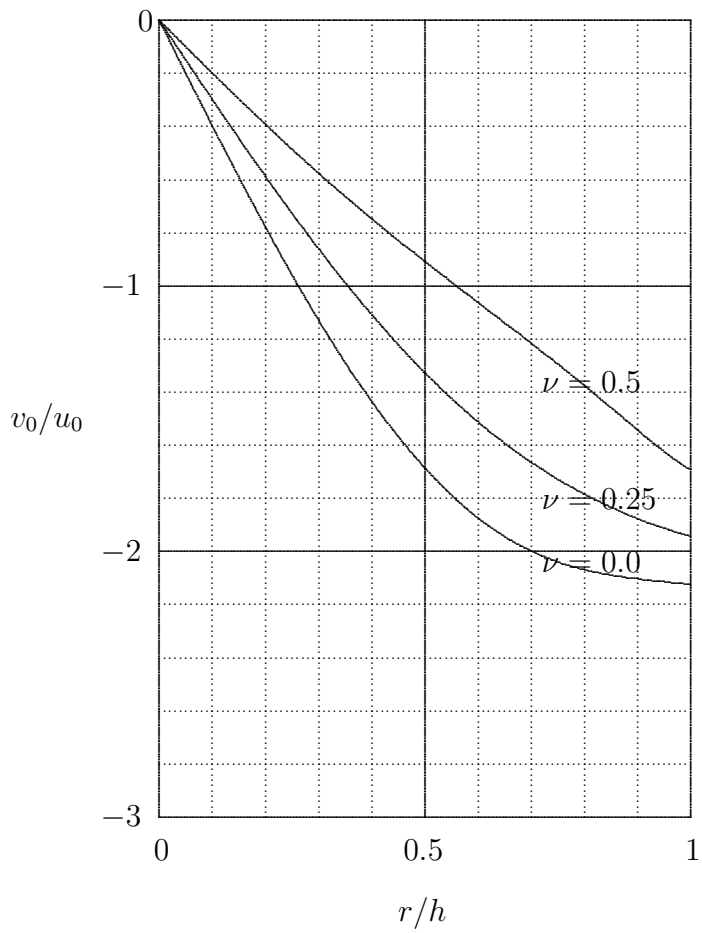

Figure 13.6. Vertical displacement of origin

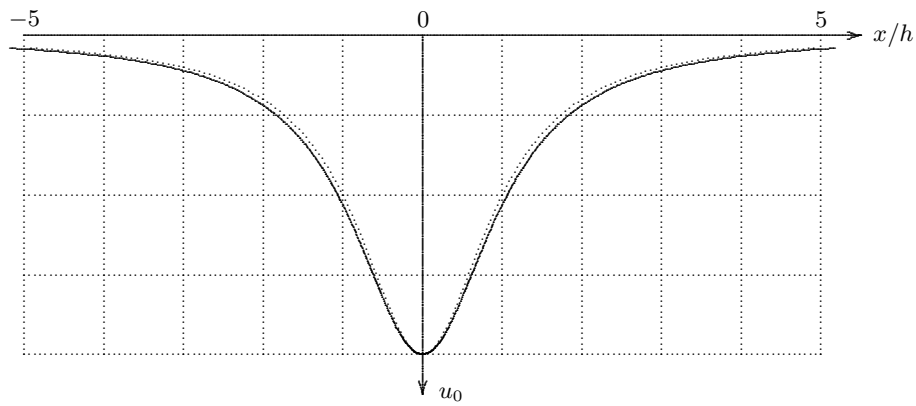

Figure 13.7. Surface settlement

Figure 13.7 shows the actual settlement trough, for $r/h = 0.5$ and $\nu = 0$. The dotted line shows the shape of the settlement trough obtained from Sagaseta's simplified solution (Sagaseta, 1987; Verruijt & Booker, 1996), using a scale factor to let the maximum displacements coincide.

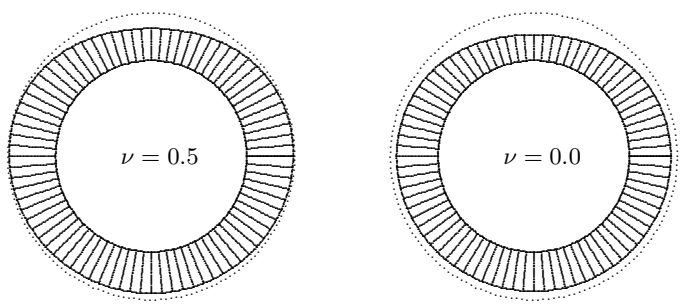

Figure 13.8. Radial stress at tunnel; $r/h = 0.5$

Figure 13.8 shows the radial stress at the tunnel boundary, for $\nu = 0.5$ and $\nu = 0.0$.
Figure 13.9 shows the apparent spring constants at the tunnel surface. This is the radial stress divided by the local radial displacement. The figure applies to the case $r/h = 0.5$. This means that the ratio of the covering depth d to the diameter D of the tunnel is $d/D = 0.5$, indicating a very shallow tunnel. In this case the spring constant above the tunnel is significantly smaller than the average one.

Figure 13.10 shows the apparent spring constants for the case $r/h = 0.3333$, or $d/D = 1.0$. The horizontal line above the figure indicates the location of the upper surface, considering the inner circle as the location of the tunnel.

Figure 13.11 shows the apparent spring constants for the case $r/h = 0.25$, or $d/D = 1.5$. For this case of a relatively deep tunnel the distribution of the spring constants is almost constant.

Figure 13.12 shows the total volume below the settlement trough, as a function of ν and r/h. It appears that this is always greater than the total ground loss, by a factor varying between 1 and 2.

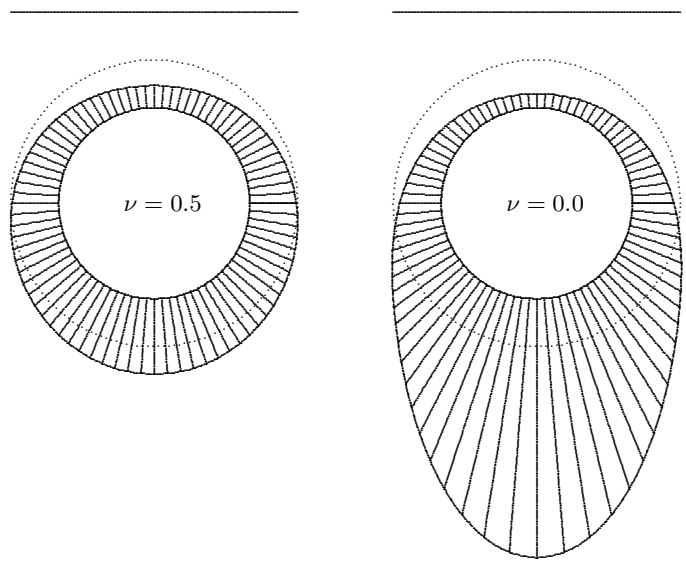

Figure 13.9. Springs for constant displacement; $r/h = 0.5$

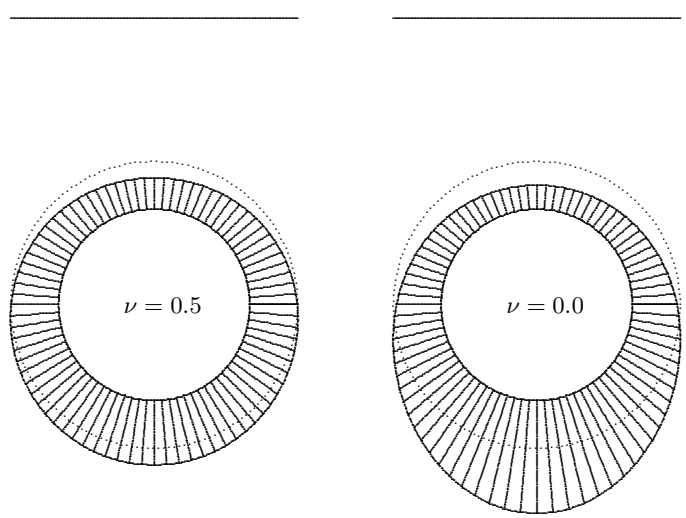

Figure 13.10. Springs for constant displacement; $r/h = 0.3333$

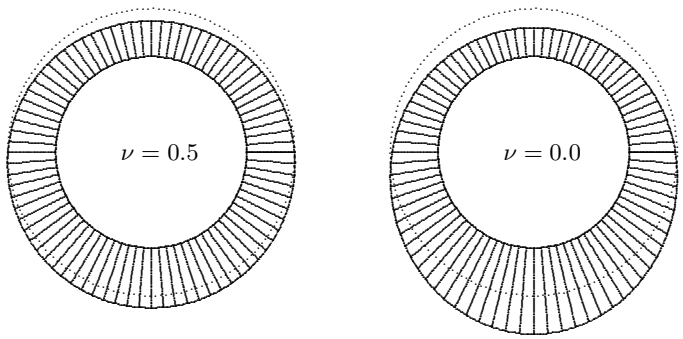

Figure 13.11. Springs for constant displacement; $r/h = 0.25$

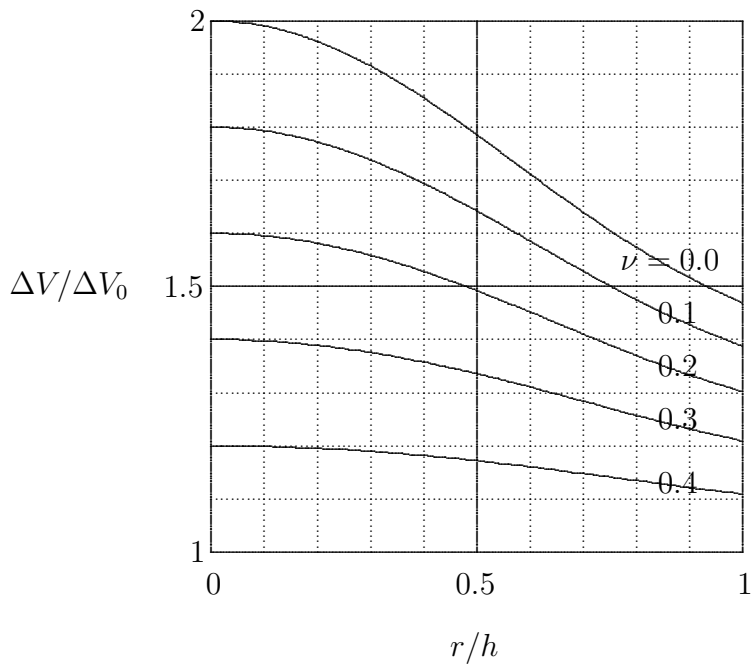

Figure 13.12. Relative volume change

14. Uniform vertical displacement of the cavity boundary

The problem to be considered in this chapter is that the upper boundary of the half plane is free of stress (as in all previous problems), and that along the boundary of the circular cavity a uniform vertical displacement is imposed. This problem may be suggested by the application of a vertical force on a rigid tunnel embedded in an elastic half plane.

The solution of this problem differs only slightly from that of the problem with a uniform radial displacement (the ground loss problem), considered in chapters 11, 12 and 13. Because the upper boundary is considered to be free of stress, the coefficients c_k and d_k can be expressed into a_k and b_k by the relations (8.14) – (8.16). These relations are

$$c_0 = -\overline{a}_0 - \tfrac{1}{2}a_1 - \tfrac{1}{2}b_1, \tag{14.1}$$

$$c_k = -\overline{b}_k - \tfrac{1}{2}(k+1)a_{k+1} + \tfrac{1}{2}(k-1)a_{k-1}, \qquad k = 1, 2, 3, \ldots, \tag{14.2}$$

$$d_k = -\overline{a}_k + \tfrac{1}{2}(k-1)b_{k-1} - \tfrac{1}{2}(k+1)b_{k+1}, \qquad k = 1, 2, 3, \ldots, \tag{14.3}$$

It may be noted that these relations have been derived under the assumption that the coefficient C in the boundary condition, see eq. (2.98), is zero. This implies that the resultant force on this boundary is zero.

If the coefficients a_k and b_k can be found, the determination of the coefficients c_k and d_k from the equations (14.1) – (14.3) is explicit and straightforward.

14.1 Inner boundary

At the inner boundary the displacements are now assumed to be

$$u_x + iu_y = iu_0, \tag{14.4}$$

where u_0 is a given constant, the prescribed vertical displacement at the cavity boundary.

The modified boundary condition (obtained after multiplication of the boundary condition by a factor $(1-\zeta_0)$, in order to eliminate the singularity) is, compare (11.9),

$$G'(\zeta_0) = \kappa T_1(\zeta_0) - T_2(\zeta_0) - T_3(\zeta_0), \tag{14.5}$$

where now

$$G'(\zeta_0) = (1-\zeta_0)G(\zeta_0) = 2\mu(1-\alpha\sigma)(u_x + iu_y) = 2i\mu u_0(1-\alpha\sigma). \tag{14.6}$$

Using the expression (11.16) for the sum of the three terms in the right hand side of (14.5), the boundary condition leads to the equation

$$\begin{aligned} 2i\mu u_0(1-\alpha\sigma) &= a_0(\kappa+1) \\ &+ \sum_{k=0}^{\infty}\big[-(1-\alpha^2)k\overline{a}_k + (1-\alpha^2)(k+1)\overline{a}_{k+1} \\ &\qquad -(\alpha^2+\kappa\alpha^{-2k})b_{k+1} + (1+\kappa\alpha^{-2k})b_k\big]\alpha^k\sigma^{-k} \\ &+ \sum_{k=1}^{\infty}\big[-(1-\alpha^2)(k-1)\overline{b}_{k-1} + (1-\alpha^2)k\overline{b}_k \\ &\qquad -(\alpha^2+\kappa\alpha^{2k})a_{k-1} + (1+\kappa\alpha^{2k})a_k\big]\alpha^{-k}\sigma^k. \end{aligned} \tag{14.7}$$

From this equation the coefficients a_k and b_k must be determined.

14.1.1 Determination of the constants

By setting the coefficients of all powers other than 0 and 1 equal to zero, the following system of equations is obtained, see the derivation of (11.21) and (11.22),

$$\begin{aligned}(1-\alpha^2)(k+1)a_{k+1} - (\alpha^2+\kappa\alpha^{-2k})\overline{b}_{k+1} = \\ = (1-\alpha^2)ka_k - (1+\kappa\alpha^{-2k})\overline{b}_k, \quad k=1,2,3,\ldots.\end{aligned} \tag{14.8}$$

$$\begin{aligned}(1+\kappa\alpha^{2k+2})a_{k+1} + (1-\alpha^2)(k+1)\overline{b}_{k+1} = \\ = (\alpha^2+\kappa\alpha^{2k+2})a_k + (1-\alpha^2)k\overline{b}_k, \quad k=1,2,3,\ldots.\end{aligned} \tag{14.9}$$

From these two equations the coefficients can be determined recursively, if the starting values a_1 and b_1 are known.

These starting values, a_1 and b_1, may be determined from the coefficients of the powers σ^0 and σ^1. This gives

$$(1-\alpha^2)\overline{a}_1 - (\kappa+\alpha^2)b_1 = 2i\mu u_0 - (\kappa+1)a_0, \tag{14.10}$$

$$(1-\alpha^2)\overline{b}_1 + (1+\kappa\alpha^2)a_1 = -2i\mu u_0\alpha^2 + (\kappa+1)\alpha^2 a_0. \tag{14.11}$$

The coefficient a_0 is still undetermined in this stage. It represents a rigid body displacement, which may be related to the displacement at infinity. Its value will be determined from the condition that the coefficients in the Laurent series tend towards zero for large values of k. This condition is thought to imply that the stresses vanish at infinity.

It is assumed that all the coefficients are purely imaginary, because of the symmetry of the problem. Therefore we will write

$$a_k = 2i\mu u_0 p_k, \tag{14.12}$$

$$b_k = 2i\mu u_0 q_k, \tag{14.13}$$

$$c_k = 2i\mu u_0 r_k, \tag{14.14}$$

$$d_k = 2i\mu u_0 s_k. \tag{14.15}$$

Equations (14.10) and (14.11) now give

$$(1-\alpha^2)p_1 + (\kappa+\alpha^2)q_1 = -1 + (\kappa+1)p_0, \tag{14.16}$$

$$-(1-\alpha^2)q_1 + (1+\kappa\alpha^2)p_1 = [-1+(\kappa+1)p_0]\alpha^2. \tag{14.17}$$

The solution of this system of equations is found to be

$$p_1 = q_1 = p_0 - \frac{1}{\kappa+1}. \tag{14.18}$$

Using these starting values the problem has been elaborated in a computer program, in which the last remaining coefficient p_0 is determined such that the coeffciients q_k tend towards zero for $k \to \infty$. This appears to lead to the value

$$p_0 = \frac{1}{\kappa+1}. \tag{14.19}$$

All other coefficients then are zero. This solution represents a uniform displacement of the entire field, which clearly satisfies all boundary conditions, as they have been formulated here: a uniform vertical displacement of the cavity boundary, zero stresses on the upper boundary of the half plane, and vanishing stresses at infinity.

This degenerate solution could have been formulated immediately, of course, but it is interesting to observe that it is also obtained by the general approach used here.

14.1.2 Conclusion

It must be concluded that the problem considered here has a degenerate solution, of a uniform rigid body translation. This solution has little practical significance, because of the poor representation of the behaviour near infinity. The stress field caused by a uniform vertical displacement of a rigid tunnel may be approached more realistically by first considering the particular solution for a force in the interior of an elastic half plane. This solution (by Melan) is known to have a logarithmic singularity in the displacement field at infinity, and requires that a certain point in the field is considered to be fixed. This point can be chosen at the depth of a practically rigid base layer. The displacements beyond that point, which will approach infinite values at infinity, may be considered as irrelevant to reality. The displacements near the point of application of the force will also tend towards infinity, but this singularity can be removed by considering the force to be the resultant of a certain distribution of distributed stresses. This approach will require a solution in two steps : a first step to represent the singular solution, and a second step to balance the displacements or the stresses at the cavity boundary.

15. The ovalization problem

Another example of a problem with a given displacement along the boundary of the tunnel is the case in which an ovalization of the tunnel boundary is imposed. This problem has been considered and solved by Strack, see Strack & Verruijt (2000) and Strack (2002). In this chapter this solution is reproduced, using the general aproach to the second boundary value problem presented in Chapter 11.

As before, the complex stress functions $\phi(\zeta)$ and $\psi(\zeta)$ are again represented by their Laurent series expansions,

$$\phi(\zeta) = a_0 + \sum_{k=1}^{\infty} a_k \zeta^k + \sum_{k=1}^{\infty} b_k \zeta^{-k}, \tag{15.1}$$

$$\psi(\zeta) = c_0 + \sum_{k=1}^{\infty} c_k \zeta^k + \sum_{k=1}^{\infty} d_k \zeta^{-k}, \tag{15.2}$$

These series expansions will converge up to the boundaries $|\zeta| = 1$ and $|\zeta| = \alpha$. The coefficients a_k, b_k, c_k and d_k must be determined from the boundary conditions.

15.1 Outer boundary

The boundary condition along the outer boundary ($|\zeta| = 1$) is again that it is free of stress, which leads to the relations

$$c_0 = -\overline{a}_0 - \tfrac{1}{2}a_1 - \tfrac{1}{2}b_1, \tag{15.3}$$

$$c_k = -\overline{b}_k - \tfrac{1}{2}(k+1)a_{k+1} + \tfrac{1}{2}(k-1)a_{k-1}, \qquad k = 1, 2, 3, \ldots, \tag{15.4}$$

$$d_k = -\overline{a}_k + \tfrac{1}{2}(k-1)b_{k-1} - \tfrac{1}{2}(k+1)b_{k+1}, \qquad k = 1, 2, 3, \ldots, \tag{15.5}$$

One half of the unknown coefficients have now been expressed into the other half. It may be noted that for $k = 1$ the last two expressions each contain a non-existing term, but with a factor 0. If the coefficients a_k and b_k can be found, the determination of c_k and d_k is explicit and straightforward.

15.2 Inner boundary

At the inner boundary the displacements are supposed to be prescribed. The appropriate form of the boundary condition is given by (2.95),

$$G = 2\mu(u_x + iu_y) = \kappa\phi(z) - z\overline{\phi'(z)} - \overline{\psi(z)}, \tag{15.6}$$

where for plane strain

$$\kappa = \frac{\lambda + 3\mu}{\lambda + \mu} = 3 - 4\nu. \tag{15.7}$$

and for plane stress

$$\kappa = \frac{5\lambda + 6\mu}{3\lambda + 2\mu} = \frac{3 - \nu}{1 + \nu}. \tag{15.8}$$

The modified boundary condition, obtained after multiplication by a factor $(1 - \alpha\sigma)$, is, by analogy with (8.18),

$$G'(\zeta_0) = \kappa T_1(\zeta_0) - T_2(\zeta_0) - T_3(\zeta_0), \tag{15.9}$$

where

$$G'(\zeta_0) = (1 - \zeta_0)G(\zeta_0) = 2\mu(1 - \alpha\sigma)(u_x + iu_y), \tag{15.10}$$

where $\zeta_0 = \alpha\sigma$ and

$$T_1(\zeta_0) = (1-\zeta_0)\phi(\zeta_0), \tag{15.11}$$

$$T_2(\zeta_0) = (1-\zeta_0)\frac{\omega(\zeta_0)}{\overline{\omega'(\zeta_0)}}\,\overline{\phi'(\zeta_0)}, \tag{15.12}$$

$$T_3(\zeta_0) = (1-\zeta_0)\overline{\psi(\zeta_0)}. \tag{15.13}$$

The first term can be elaborated to the form

$$T_1(\zeta_0) = a_0 + \sum_{k=1}^{\infty}(a_k - a_{k-1})\alpha^k\sigma^k + \sum_{k=0}^{\infty}(b_k - b_{k+1})\alpha^{-k}\sigma^{-k}. \tag{15.14}$$

And the sum of the second and third terms is

$$\begin{aligned} T_2(\zeta_0) + T_3(\zeta_0) &= -a_0 \\ &+ \sum_{k=0}^{\infty}\big[(1-\alpha^2)k\overline{a}_k - (1-\alpha^2)(k+1)\overline{a}_{k+1} - b_k + \alpha^2 b_{k+1}\big]\alpha^k\sigma^{-k} \\ &+ \sum_{k=1}^{\infty}\big[(1-\alpha^2)(k-1)\overline{b}_{k-1} - (1-\alpha^2)k\overline{b}_k + \alpha^2 a_{k-1} - a_k\big]\alpha^{-k}\sigma^k, \end{aligned} \tag{15.15}$$

where $b_0 = 0$, see (8.27).

15.2.1 Terms 1, 2 and 3

The right hand side of the expression (15.9) now is, with (15.14) and (15.15),

$$\begin{aligned} \kappa T_1(\zeta_0) - T_2(\zeta_0) - T_3(\zeta_0) &= a_0(\kappa+1) \\ &+ \sum_{k=0}^{\infty}\big[-(1-\alpha^2)k\overline{a}_k + (1-\alpha^2)(k+1)\overline{a}_{k+1} \\ &\qquad -(\alpha^2 + \kappa\alpha^{-2k})b_{k+1} + (1+\kappa\alpha^{-2k})b_k\big]\alpha^k\sigma^{-k} \\ &+ \sum_{k=1}^{\infty}\big[-(1-\alpha^2)(k-1)\overline{b}_{k-1} + (1-\alpha^2)k\overline{b}_k \\ &\qquad -(\alpha^2 + \kappa\alpha^{2k})a_{k-1} + (1+\kappa\alpha^{2k})a_k\big]\alpha^{-k}\sigma^k. \end{aligned} \tag{15.16}$$

Note that in each of the series of terms only two levels of coefficients occur: $k-1$ and k or k and $k+1$. It should also be noted that the first series of terms contains a common factor α^k, and that the second series of terms contains a common factor α^{-k}.

15.2.2 The boundary condition for the ovalization problem

According to the modified boundary condition (15.9) the value of the expression (15.16) must be equal to $G'(\zeta_0) = G'(\alpha\sigma)$. The precise form of this condition depends upon the nature of the prescribed displacements. For the case of ovalization this function is (Strack, 2002)

$$G'(\alpha\sigma) = \sum_{k=0}^{\infty} A_k\sigma^k + \sum_{k=1}^{\infty} B_k\sigma^{-k}, \tag{15.17}$$

with

$$A_k = i\mu u_d \begin{cases} -2\alpha, & k=0, \\ 2\alpha^2(2-\alpha^2), & k=1, \\ \alpha^{k-3}(1-\alpha^2)^2[(k+1)(1-\alpha^2)-3], & k\geq 2, \end{cases} \tag{15.18}$$

and

$$B_k = i\mu u_d\ \alpha^{k-1}(1-\alpha^2)^2,\ k \geq 1. \tag{15.19}$$

In these equations u_d is the amplitude of the ovalization.

The two expressions (15.16) and (15.17) must be equal. This requires that the coefficients of like powers must be equal.

For the coefficients of σ^{-k}, with $k = 1, 2, \ldots$ this gives

$$(1-\alpha^2)(k+1)\overline{a}_{k+1} - (\alpha^2 + \kappa\alpha^{-2k})b_{k+1} = \\ (1-\alpha^2)k\overline{a}_k - (1+\kappa\alpha^{-2k})b_k + \alpha^{-k}B_k, \quad k = 1, 2, \ldots. \tag{15.20}$$

And for the coefficients of σ^k, with $k = 2, 3, \ldots$ this gives

$$(1+\kappa\alpha^{2k})a_k + (1-\alpha^2)k\overline{b}_k = \\ (\alpha^2 + \kappa\alpha^{2k})a_{k-1} + (1-\alpha^2)(k-1)\overline{b}_{k-1} + \alpha^k A_k, \quad k = 2, 3, \ldots, \tag{15.21}$$

or, replacing k by $k+1$,

$$(1+\kappa\alpha^{2k+2})a_{k+1} + (1-\alpha^2)(k+1)\overline{b}_{k+1} = \\ (\alpha^2 + \kappa\alpha^{2k+2})a_k + (1-\alpha^2)k\overline{b}_k + \alpha^{k+1}A_{k+1}. \quad k = 1, 2, \ldots. \tag{15.22}$$

From the two equations (15.20) and and (15.22) the two coefficients a_{k+1} and b_{k+1} can be calculated if a_k and b_k are known. This recursive process may start from $k = 1$.

The starting values, a_1 and b_1, may be determined from the coefficients of the powers σ^0 and σ^1. This gives

$$(1-\alpha^2)\overline{a}_1 - (\kappa + \alpha^2)b_1 = -(\kappa+1)a_0 + A_0, \tag{15.23}$$

$$(1-\alpha^2)\overline{b}_1 + (1+\kappa\alpha^2)a_1 = (\kappa+1)\alpha^2 a_0 + \alpha A_1. \tag{15.24}$$

The coefficient a_0 is still undetermined in this stage. It represents a rigid body displacement, which may be related to the displacement at infinity. It is assumed that its value is to be determined from the condition that the coefficients in the Laurent series tend towards zero for large values of k. This condition means that the stresses are supposed to vanish at infinity.

If it is assumed, on the basis of a consideration of symmetry, that all coefficients are purely imaginary, so that taking the complex conjugate corresponds to multiplication by -1, the solution of the system of equations (15.23) and (15.24) is

$$a_1 = a_0 - \frac{(1-\alpha^2 A_0 - (\kappa+\alpha^2)\,\alpha A_1}{(\kappa+1)[1+(\kappa-1)\alpha^2+\alpha^4]}, \tag{15.25}$$

$$b_1 = a_0 - \frac{(1+\kappa\alpha^2)A_0 + (1-\alpha^2)\,\alpha A_1}{(\kappa+1)[1+(\kappa-1)\alpha^2+\alpha^4]}. \tag{15.26}$$

Thus the first two coefficients have been determined. The other coefficients can next be calculated successively.

15.3 Calculation of the coefficients

It is assumed that all the coefficients are purely imaginary, because of the symmetry of the problem. Therefore we will write, as in chapter 12,

$$a_k = 2i\mu u_d p_k, \tag{15.27}$$

$$b_k = 2i\mu u_d q_k, \tag{15.28}$$

$$c_k = 2i\mu u_d r_k, \tag{15.29}$$

$$d_k = 2i\mu u_d s_k. \tag{15.30}$$

Furthermore the coefficients A_k and B_k are now replaced by

$$A_k = 2i\mu u_d A_k^* \alpha^{-k}, \tag{15.31}$$

$$B_k = 2i\mu u_d B_k^* \alpha^{k}, \tag{15.32}$$

so that, with (15.18) and (15.19),

$$A_k^* = \begin{cases} -\alpha, & k = 0, \\ \alpha^3(2-\alpha^2), & k = 1, \\ \frac{1}{2}\alpha^{2k-3}(1-\alpha^2)^2[(k+1)(1-\alpha^2)-3], & k \geq 2, \end{cases} \tag{15.33}$$

and

$$B_k^* = \tfrac{1}{2}\alpha^{-1}(1-\alpha^2)^2, \ k \geq 1. \tag{15.34}$$

It is assumed that the coefficient p_0 can be determined later. For the moment it is left as an unknown parameter.

It follows from equations (15.25) and (15.26) that the first two coefficients p_1 and q_1 can be determined from the equations

$$p_1 = p_0 - \frac{(1-\alpha^2 A_0^* - (\kappa+\alpha^2)A_1^*}{(\kappa+1)[1+(\kappa-1)\alpha^2+\alpha^4]}, \tag{15.35}$$

$$q_1 = p_0 - \frac{(1+\kappa\alpha^2)A_0^* + (1-\alpha^2)A_1^*}{(\kappa+1)[1+(\kappa-1)\alpha^2+\alpha^4]}. \tag{15.36}$$

The remaining coefficients p_k and q_k have to be determined from the equations (15.20) and (15.22), which give

$$\begin{aligned}(1-\alpha^2)(k+1)p_{k+1} + (\alpha^2+\kappa\alpha^{-2k})q_{k+1} = \\ = (1-\alpha^2)kp_k + (1+\kappa\alpha^{-2k})q_k - B_k^*, \quad k = 1,2,3,\ldots.\end{aligned} \tag{15.37}$$

$$\begin{aligned}(1+\kappa\alpha^{2k+2})p_{k+1} - (1-\alpha^2)(k+1)q_{k+1} = \\ = (\alpha^2+\kappa\alpha^{2k+2})p_k - (1-\alpha^2)kq_k + A_{k+1}^*, \quad k = 1,2,3,\ldots.\end{aligned} \tag{15.38}$$

This system of equations can best be solved numerically. The form of the system of equations is not very well suited for such a solution, however, because some of the off-diagonal coefficients become very large if $k \to \infty$, noting that $\alpha < 1$. Therefore they can better be re-arranged and rewritten as follows,

$$\begin{aligned}(1+\kappa\alpha^{2k+2})p_{k+1} - (1-\alpha^2)(k+1)q_{k+1} = \\ = (\alpha^2+\kappa\alpha^{2k+2})p_k - (1-\alpha^2)kq_k + A_{k+1}^*, \quad k = 1,2,3,\ldots.\end{aligned} \tag{15.39}$$

$$\begin{aligned}(1-\alpha^2)(k+1)\alpha^{2k}p_{k+1} + (\kappa+\alpha^{2k+2})q_{k+1} = \\ = (1-\alpha^2)k\alpha^{2k}p_k + (\kappa+\alpha^{2k})q_k - B_k^*\alpha^{2k}, \quad k = 1,2,3,\ldots.\end{aligned} \tag{15.40}$$

Written in this form the terms remain finite when $k \to \infty$, and the terms on the main diagonal do not tend towards zero.

The system of equations can now be solved in successive steps, starting from an assumed value of p_0. It is postulated that the value of p_0 must be determined from the condition that for very large values of k the coefficients p_k must tend towards zero. Because all the coefficients depend linearly upon p_0 this coefficient can now easily be determined by first assuming $p_0 = 0$, calculating the last term p_n, then assuming $p_0 = 1$, again calculating p_n, and then finally determining the correct value of p_0 by linear interpolation. It has been found that this works satisfactorily, provided that the number of terms (n) is large enough.

The coefficients r_k and s_k can be determined using the relations (11.3) – (11.5) and (15.29) and (15.30). This gives

$$r_0 = p_0 - \tfrac{1}{2}p_1 - \tfrac{1}{2}q_1, \tag{15.41}$$

$$r_k = q_k - \tfrac{1}{2}(k+1)p_{k+1} + \tfrac{1}{2}(k-1)p_{k-1}, \qquad k = 1, 2, 3, \ldots, \tag{15.42}$$

$$s_k = p_k - \tfrac{1}{2}(k+1)q_{k+1} + \tfrac{1}{2}(k-1)q_{k-1}, \qquad k = 1, 2, 3, \ldots. \tag{15.43}$$

All the coefficients now are known, so that the solution can be further elaborated.

Finally, all stresses and displacements can be determined using the equations that were given in Chapter 12.