INTERNATIONAL JOURNAL FOR NUMERICAL AND ANALYTICAL METHODS IN GEOMECHANICS, VOL. 21, 77–89 (1997)

A COMPLEX VARIABLE SOLUTION FOR A DEFORMING CIRCULAR TUNNEL IN AN ELASTIC HALF-PLANE

A. VERRUIJT

Faculty of Civil Engineering, TU-Delft, The Netherlands

SUMMARY

An analytical solution is presented of problems for an elastic half-plane with a circular tunnel, which undergoes a certain given deformation. The solution uses complex variables, with a conformal mapping onto a circular ring. The coefficients in the Laurent series expansion of the stress functions are determined by a combination of analytical and numerical computations. As an example the case of a uniform radial displacement of the tunnel boundary is considered in some detail. It appears that a uniform radial displacement is accompanied by a downward displacement of the tunnel as a whole. This phenomenon also means that the distribution of the apparent spring constant is strongly non-uniform. © 1997 by John Wiley & Sons, Ltd.

Int. j. numer. methods geomech., vol. 21, 77–89 (1997)
(No. of Figures: 7 No. of Tables: 1 No. of Refs: 10)

Key words: elasticity; tunnel; complex variables

INTRODUCTION

In this paper the stresses and displacements in an elastic half-plane due to the deformation of a circular tunnel are considered. The method used is the complex variable method.[1] The boundary conditions are that the upper boundary of the half-plane is free of stress, and that at the boundary of the tunnel the displacement is prescribed. This is usually called the second type of boundary condition. In order to solve the problem, a conformal transformation onto a circular ring is used, and in the transformed plane the complex stress functions are represented by their Laurent series expansions.

In the classical treatises of Muskhelishvili[1] and Sokolinikoff[2] on the application of the complex variable method in elasticity, the class of problems studied here, involving a multiply connected region and conformal mapping onto a circular ring, is briefly mentioned, but it is stated that 'difficulties' arise in the solution of these problems, and it is suggested to use another method of solution, such as the method using bipolar co-ordinates.[3–5] In this paper it will be shown that these difficulties can be surmounted, at least for the case of a circular cavity with a prescribed radial displacement, by a combination of analytical and numerical analysis. The main difficulty encountered in this procedure is that the boundary conditions do not immediately suffice to determine the coefficients in the Laurent series expansions of the complex stress functions. It appears necessary to also require that the coefficients of the series tend towards zero for large values of the term counter, which can be considered to be a consequence of the convergence criterion. In this way a closed-form solution is obtained, with an infinite number of terms.

The advantage of the complex variable method with respect to the method using bipolar co-ordinates is that the complex variable method is of a more general character, enabling the solution of problems for various types of boundary conditions. Another advantage is that it not

CCC 0363–9061/97/020077–13
© 1997 by John Wiley & Sons, Ltd.
Received 24 January 1996
Revised 5 June 1996

only leads to solutions for the stresses, but also directly gives the displacements. It is not yet quite clear to what extent the solution method presented here can be generalized, to other shapes of tunnels, or to other types of boundary conditions, perhaps including gravity or buoyancy effects. It can be expected, however, that these will not be trivial extensions.

The problem considered is an idealization of the *ground loss* problem,[6] which may occur in tunnel engineering practice when using a tunnel boring machine. Although the tunnelling process may be executed very carefully, and appropriate engineering techniques may be applied to minimize the deformations (for instance, the injection of grout into the soil surrounding the tunnel) it remains of interest to study the deformations and stresses caused by a certain amount of ground loss. A severe restriction of the present solution is that it applies only to a homogeneous linear elastic material, which is a rather poor representation of soil or rock. The solution may be used, however, as a first approximation, and as a reference case for (numerical) models on the basis of more sophisticated material behaviour. Some typical results of the analytical solution are that a marked difference is obtained for the apparent spring constant along the circumference of the tunnel, and that any shrinking of the tunnel is accompanied by a downward displacement of the tunnel as a whole.

STATEMENT OF THE PROBLEM

The problem refers to an elastic half-plane with a circular tunnel, see Figure 1. The upper boundary of the half-plane is free of stress, and loading takes place along the boundary of the

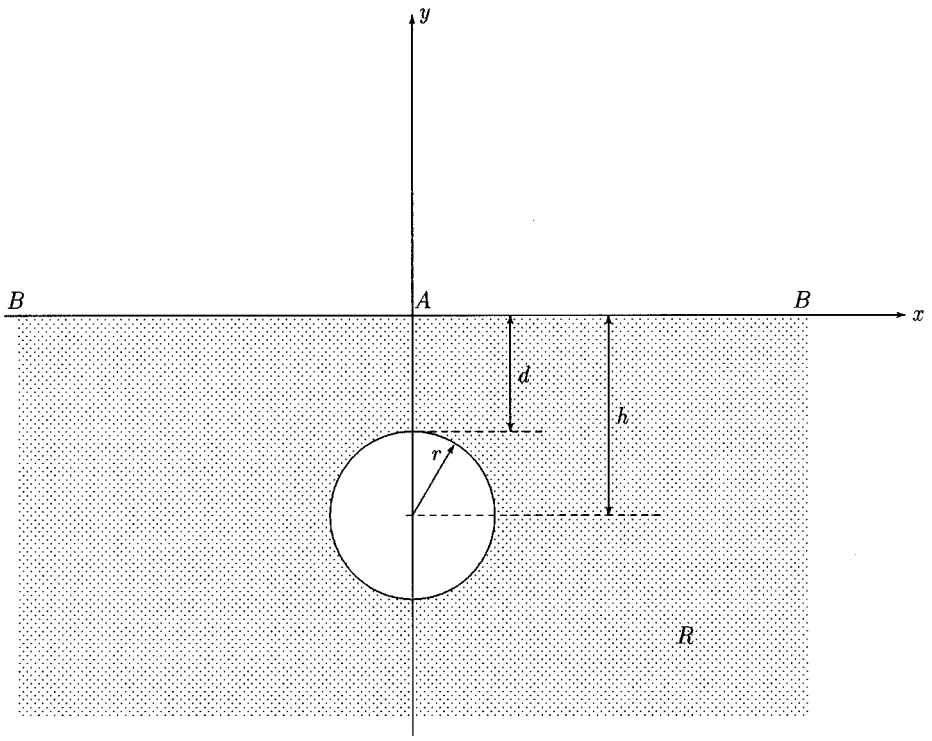

Figure 1. Half-plane with circular tunnel

tunnel, in the form of a given distribution of displacements. The radius of the tunnel is denoted by r, the depth of its centre below the free surface by h, and the cover by d, see Figure 1. The ratio r/h will be considered as the basic geometrical parameter.

In the complex variable method,[1,2,7] the solution is expressed in terms of two functions $\phi(z)$ and $\psi(z)$, which must be analytic in the region R occupied by the elastic material (the half-plane $y < 0$ with the exclusion of the circular hole). The stresses are related to these functions by the equations

$$\sigma_{xx} + \sigma_{yy} = 2\{\phi'(z) + \overline{\phi'(z)}\} \tag{1}$$

$$\sigma_{yy} - \sigma_{xx} + 2\mathrm{i}\sigma_{xy} = 2\{\bar{z}\phi''(z) + \psi'(z)\} \tag{2}$$

and the displacements are given by

$$2\mu(u_x + \mathrm{i}u_y) = \kappa\phi(z) - z\overline{\phi'(z)} - \overline{\psi(z)} \tag{3}$$

where μ is the shear modulus of the elastic material, and κ is related to Poisson's ratio ν by

$$\kappa = 3 - 4\nu \tag{4}$$

for plane strain, and

$$\kappa = \frac{3 - \nu}{1 + \nu} \tag{5}$$

for plane stress. In this paper plane strain conditions are assumed.

The boundary conditions are that either the displacements or the surface tractions are prescribed along the boundary. In the first case the quantity $u_x + \mathrm{i}u_y$ is prescribed, which means that the combination of functions on the right-hand side of (3) is given. In the second case it is most convenient to express the boundary condition in terms of the integral of the surface tractions, integrated along the boundary,

$$F = F_1 + \mathrm{i}F_2 = \mathrm{i}\int_0^s (t_x + \mathrm{i}t_y)\mathrm{d}s \tag{6}$$

It can be shown[1] that this function is related to the complex stress functions $\phi(z)$ and $\psi(z)$ by

$$F = F_1 + \mathrm{i}F_2 = \phi(z) + z\overline{\phi'(z)} - \overline{\psi(z)} + C \tag{7}$$

where C is an integration constant. For the class of problems considered in this paper this constant may be omitted, because it can be incorporated into a rigid-body motion of the entire plane. It may be noted that the expressions in (3) and (7) are very similar, as they differ only through the value of the factor κ.

THE SOLUTION METHOD

Conformal mapping

It is assumed that the region R in the z-plane can be mapped conformally onto a ring in the ζ-plane, bounded by the circles $|\zeta| = 1$ and $|\zeta| = \alpha$, where $\alpha < 1$, see Figure 2. This ring-shaped region is denoted by γ. The appropriate conformal transformation is

$$z = \omega(\zeta) = -\mathrm{i}h\frac{1 - \alpha^2}{1 + \alpha^2}\frac{1 + \zeta}{1 - \zeta} \tag{8}$$

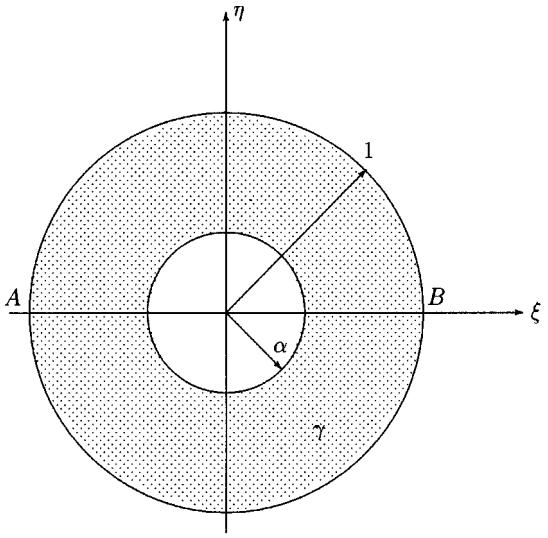

Figure 2. Plane of conformal transformation

where h is the depth of the centre of the cavity, and α is a parameter defined by the ratio (r/h) of the radius and the depth of the cavity,

$$\frac{r}{h} = \frac{2\alpha}{1+\alpha^2} \tag{9}$$

It can easily be verified that the circle $|\zeta| = 1$ corresponds to the axis $y = 0$, and that the circle $|\zeta| = \alpha$ corresponds to the circle $x^2 + (y+h)^2 = r^2$. The origin in the z-plane is mapped onto $\zeta = -1$, and the point at infinity in the z-plane is mapped onto $\zeta = 1$, see Figures 1 and 2. If $\alpha \to 0$ the radius of the circular cavity is practically zero, which indicates a very deep tunnel, or a very large covering depth. If $\alpha \to 1$ the covering depth is very small. For every value of r/h the corresponding value of α can be determined form (9).

Because the conformal transformation function $\omega(\zeta)$ is analytic in the ring bounded by the circles $|\zeta| = 1$ and $|\zeta| = \alpha$, the functions $\phi(z)$ and $\psi(z)$, which must be analytic throughout the region R in the z-plane, can be considered as functions of ζ,

$$\phi(z) = \phi(\omega(\zeta)) = \phi(\zeta) \tag{10}$$

$$\psi(z) = \psi(\omega(\zeta)) = \psi(\zeta) \tag{11}$$

and they are both analytic in the region γ in the ζ-plane. This means that they can be represented by their Laurent series expansions,

$$\phi(\zeta) = a_0 + \sum_{k=1}^{\infty} a_k \zeta^k + \sum_{k=1}^{\infty} b_k \zeta^{-k} \tag{12}$$

$$\psi(\zeta) = c_0 + \sum_{k=1}^{\infty} c_k \zeta^k + \sum_{k=1}^{\infty} d_k \zeta^{-k} \tag{13}$$

These series expansions are assumed to converge up to the boundaries $|\zeta| = 1$ and $|\zeta| = \alpha$. The point $\zeta = -\mathrm{i}$, which corresponds to infinity in the z-plane, deserves some special consideration. It is assumed that the problems considered are such that the stresses and displacements are

bounded at infinity, so that it may be assumed that the series also converge on the boundaries. This implies that the state of stress at the tunnel boundary must be an equilibrium system.

The coefficients a_k, b_k, c_k and d_k must be determined from the boundary conditions. The two main types of boundary conditions, given displacements or given surface tractions, are expressed in terms of the functions $\phi(z)$, $\psi(z)$, and a term $z\overline{\phi'(z)}$; see (7) and (3). When transforming these conditions in terms of the variable ζ the term $z\overline{\phi'(z)}$ needs special attention. Because $\phi'(z)$ is defined as $\mathrm{d}\phi/\mathrm{d}z$ (the accent denoting differentiation with respect to the variable indicated), the derivative with respect to ζ can be written as

$$\phi'(\zeta) = \frac{\mathrm{d}\phi}{\mathrm{d}\zeta} = \frac{\mathrm{d}\phi}{\mathrm{d}z}\frac{\mathrm{d}z}{\mathrm{d}\zeta} = \phi'(z)\omega'(\zeta) \tag{14}$$

It now follows that

$$z\overline{\phi'(z)} = \frac{\omega(\zeta)}{\overline{\omega'(\zeta)}}\overline{\phi'(\zeta)} \tag{15}$$

The character of the factor $\omega(\zeta)/\overline{\omega'(\zeta)}$ determines the mathematical difficulties involved in solving boundary value problems for a certain type of region.

In the present case the conformal transformation is given by equation (8). Differentiation of this expression with respect to ζ gives

$$\omega'(\zeta) = -2\mathrm{i}h\frac{1-\alpha^2}{1+\alpha^2}\frac{1}{(1-\zeta)^2} \tag{16}$$

On a circle with radius ρ in the ζ-plane we have $\zeta = \rho\sigma$, where $\sigma = \exp(\mathrm{i}\theta)$. Then $\overline{\zeta} = \rho\sigma^{-1}$. This gives

$$\frac{\omega(\zeta)}{\overline{\omega'(\zeta)}} = -\frac{1}{2}\frac{(1+\rho\sigma)(\sigma-\rho)^2}{\sigma^2(1-\rho\sigma)} \tag{17}$$

In this case, of a circular tunnel, this factor appears to be relatively simple. For problems with a tunnel of more complicated shape the factor may be so complicated that it practically prohibits analytic solution of the problem.

Boundary conditions

The first boundary condition is that the upper boundary $y = 0$ must be entirely free of stress. With (7) this gives

$$y = 0: \quad \phi(z) + z\overline{\phi'(z)} + \overline{\psi(z)} = 0 \tag{18}$$

When this condition is transformed to the ζ-plane its form is

$$|\zeta| = 1: \quad \phi(\zeta) + \frac{\omega(\zeta)}{\overline{\omega'(\zeta)}}\overline{\phi'(\zeta)} + \overline{\psi(\zeta)} = 0 \tag{19}$$

On the outer boundary $|\zeta| = 1$, the radius $\rho = 1$. Then expression (17) reduces to the simple form

$$|\zeta| = 1: \quad \frac{\omega(\zeta)}{\overline{\omega'(\zeta)}} = \frac{1}{2}(1-\sigma^{-2}) \tag{20}$$

The boundary condition (19) now gives, after some elaborations,

$$\sum_{k=1}^{\infty} a_k\sigma^k + \sum_{k=1}^{\infty} b_k\sigma^{-k} + \frac{1}{2}\sum_{k=1}^{\infty}(k+1)\,\bar{a}_{k+1}\sigma^{-k} - \frac{1}{2}\sum_{k=2}^{\infty}(k-1)\,\bar{b}_{k-1}\sigma^k$$
$$-\frac{1}{2}\sum_{k=2}^{\infty}(k-1)\,\bar{a}_{k-1}\sigma^{-k} + \frac{1}{2}\sum_{k=1}^{\infty}(k+1)\,\bar{b}_{k+1}\sigma^k + a_0 + \frac{1}{2}\bar{a}_1 + \frac{1}{2}\bar{b}_1$$
$$+\bar{c}_0 + \sum_{k=1}^{\infty}\bar{c}_k\sigma^{-k} + \sum_{k=1}^{\infty}\bar{d}_k\sigma^k = 0 \tag{21}$$

The coefficients c_k and d_k can be solved from this equation, by setting the coefficients of all powers of σ equal to zero. The result is

$$c_0 = -\bar{a}_0 - \tfrac{1}{2}a_1 - \tfrac{1}{2}b_1 \tag{22}$$

$$c_k = -\bar{b}_k + \tfrac{1}{2}(k-1)a_{k-1} - \tfrac{1}{2}(k+1)a_{k+1}, \quad k = 1, 2, 3, \ldots \tag{23}$$

$$d_k = -\bar{a}_k + \tfrac{1}{2}(k-1)b_{k-1} - \tfrac{1}{2}(k+1)b_{k+1}, \quad k = 1, 2, 3, \ldots \tag{24}$$

One-half of the unknown coefficients have now been expressed into the other half. If the coefficients a_k and b_k can be found, the determination of c_k and d_k is explicit and straightforward. The remaining unknown coefficients a_k and b_k must be determined from the boundary condition at the cavity boundary.

The second boundary value problem

In this paper the second boundary value problem is considered, in which the displacement is prescribed along the tunnel boundary. The boundary condition at the corresponding boundary in the ζ-plane is

$$|\zeta| = \alpha: \quad 2\mu(u_x + \mathrm{i}u_y) = \kappa\phi(\zeta) - \frac{\omega(\zeta)}{\overline{\omega'(\zeta)}}\overline{\phi'(\zeta)} - \overline{\psi(\zeta)} = G(\zeta) \tag{25}$$

where $G(\zeta)$ is a given function, the precise form of which depends upon the displacement distribution along the tunnel boundary in the z-plane. Points on the circle $|\zeta| = \alpha$ will be denoted by $|\zeta| = \alpha\sigma$, where then $\sigma = \exp(\mathrm{i}\theta)$. Along this circle the value of the first factor in the the second term of (25) is, with (17)

$$|\zeta| = \alpha: \quad \frac{\omega(\zeta)}{\overline{\omega'(\zeta)}} = \frac{-\alpha\sigma - (1 - 2\alpha^2) + \alpha(2 - \alpha^2)\,\sigma^{-1} - \alpha^2\sigma^{-2}}{2(1 - \alpha\sigma)} \tag{26}$$

In contrast to the boundary condition at the outer boundary, where this factor was of a very simple form, see (20), this factor now is of a complicated form, especially because of the appearance of the term $(1 - \alpha\sigma)$ in the denominator. In order to eliminate the difficulties caused by this term the boundary condition (25) is rewritten in the form

$$|\zeta| = \alpha: \quad (1 - \alpha\sigma)\left[\kappa\phi(\zeta) - \frac{\omega(\zeta)}{\overline{\omega'(\zeta)}}\overline{\phi'(\zeta)} - \overline{\psi(\zeta)}\right] = G'(\zeta) \tag{27}$$

where

$$G'(\zeta) = G'(\alpha\sigma) = (1 - \alpha\sigma)\,G(\alpha\sigma) \tag{28}$$

It may be noted that the factor $(1 - \alpha\sigma)$ is never equal to zero.

The function $G'(\alpha\sigma)$, which defines the boundary condition at the tunnel boundary, depends upon the polar co-ordinate θ. It is now assumed that this function can be written as a Fourier series,

$$G'(\alpha\sigma) = \sum_{k=-\infty}^{+\infty} A_k \sigma^k \tag{29}$$

It can be expected that for all problems of practical significance such an expansion is possible. An example will be presented below.

Elaboration of the left-hand side of equation (27), on the basis of the Laurent series expansions (12) and (13) and the expression (26), is a laborious but basically simple task, leading to sums of positive and negative powers of σ. The resulting equation must be satisfied for all possible values of σ, which will be the case if the coefficients of all powers of σ are equal in the left- and right-hand side of the equation. The system of equations for the coefficients a_k, b_k, c_k and d_k obtained in this way is of a rather complicated nature, with four levels of coefficients (e.g. a_{k-1}, a_k, a_{k+1} and a_{k+2}) appearing in the equations. However, after elimination of the coefficients c_k and d_k, using equations (22)–(24), the system of equations turns out to be less complicated, with only two levels of coefficients. The final result is that the coefficients must satisfy the equations

$$\begin{aligned}(1-\alpha^2)(k+1)\bar{a}_{k+1} - (a^2 + \kappa\alpha^{-2k})b_{k+1} \\ = (1-\alpha^2)k\bar{a}_k - (1+\kappa\alpha^{-2k})b_k + A_{-k}\alpha^{-k}, \quad k = 1, 2, 3, \ldots\end{aligned} \tag{30}$$

and

$$\begin{aligned}(1+\kappa\alpha^{2k+2})\bar{a}_{k+1} - (1-\alpha^2)(k+1)b_{k+1} \\ = \alpha^2(1+\kappa\alpha^{2k})\bar{a}_k + (1-\alpha^2)kb_k + \bar{A}_{k+1}\alpha^{k+1}, \quad k = 1, 2, 3, \ldots\end{aligned} \tag{31}$$

From these two equations the coefficients can be determined recursively. If the values a_1 and b_1 are known, the coefficients a_2 and b_2 can be calculated, and so on.

The starting values, a_1 and b_1, can be determined from the coefficients of the powers σ^0 and σ^1. This gives

$$(1-\alpha^2)\bar{a}_1 - (\kappa+\alpha^2)b_1 = A_0 - (\kappa+1)a_0 \tag{32}$$

$$(1+\kappa\alpha^2)\bar{a}_1 + (1-\alpha^2)b_1 = \bar{A}_1\alpha + (\kappa+1)\alpha^2\bar{a}_0 \tag{33}$$

Thus, all the coefficients of the Laurent series have been determined, except for a_0, which also influences all other coefficients. It seems that this coefficient remains undetermined by the boundary conditions specified above. The fact that the coefficient a_0 is undetermined is perhaps one of the difficulties mentioned by Sokolnikoff,[2] which at the time may have discouraged further elaboration of this type of problem by the complex variable method. A way out of this difficulty is by requiring that the series expansions of the functions ϕ and ψ, see (12) and (13) converge at the point $\zeta = 1$, which corresponds to $z = \infty$. A necessary condition for this to be the case is that the coefficients a_k and b_k tend towards zero if $k \to \infty$. It can easily be seen that the homogeneous form of the system of equations (30) and (31) admits a solution in which $a_{k+1} = a_k$ and $b_{k+1} = b_k$, with $\bar{a}_k + b_k = 0$. Thus, it may be expected that if the coefficients A_k and A_{-k}, representing the boundary condition, tend towards zero for $k \to \infty$, the system of recurrent relations (30) and (31) leads to a constant value of the coefficients a_k and b_k for $k \to \infty$. This constant value should be zero, which will be the case only for the correct starting value of a_0. As the system of equations is linear, the correct value of a_0 can be determined by first assuming $a_0 = 0$, then calculating (for instance numerically) the limiting value of a_k for $k \to \infty$, repeating this calculation for an initial

value $a_0 = 1$, and then determining the correct value of a_0 by linear interpolation such that $a_k \to 0$ for $k \to \infty$. It has been found, by elaborating certain specific cases, that this procedure indeed leads to satisfactory results, in which the series expansions converge throughout the entire region γ in the ζ-plane. As the Laurent series expansion is unique it follows that the correct solution has been obtained.

EXAMPLE: UNIFORM RADIAL DISPLACEMENT

As an example the problem of a uniform radial displacement of magnitude u_0 at the tunnel boundary is considered. If the displacement u_0 is considered positive in inward direction the displacement components at the tunnel face are

$$u_x = -u_0 \frac{x}{r}, \qquad u_y = -u_0 \frac{y+h}{r} \tag{34}$$

which can be combined in the complex equation

$$2\mu(u_x + \mathrm{i}u_y) = -2\mu u_0 \frac{z + \mathrm{i}h}{r} \tag{35}$$

With (8) and (9) this can be expressed in terms of the value of $\zeta = \alpha\sigma$ along the boundary in the ζ-plane,

$$2\mu(u_x + \mathrm{i}u_y) = -2\mathrm{i}\mu u_0 \frac{\alpha - \sigma}{1 - \alpha\sigma} \tag{36}$$

This is the function $G(\alpha\sigma)$ as defined in (25). It now follows that the function $G'(\zeta)$, as defined by (28), is

$$G' = -2\mathrm{i}\mu u_0(\alpha - \sigma) \tag{37}$$

It appears that in this case the boundary function only contains two terms of order σ^0 and σ^1. The only two non-zero coefficients in the Fourier expansion (29) are

$$A_0 = -2\mathrm{i}\mu u_0 \alpha, \qquad A_1 = 2\mathrm{i}\mu u_0. \tag{38}$$

The determination of the coefficients a_k and b_k may now proceed in the way outlined in the previous section.

The coefficients a_1 and b_1 can be determined from equations (32) and (33). With (38) this gives

$$(1 - \alpha^2)\bar{a}_1 - (\kappa + \alpha^2)b_1 = -2\mathrm{i}\mu u_0 \alpha - (\kappa + 1)a_0 \tag{39}$$

$$(1 + \kappa\alpha^2)\bar{a}_1 + (1 - \alpha^2)b_1 = -2\mathrm{i}\mu u_0 \alpha + (\kappa + 1)\alpha^2 \bar{a}_0 \tag{40}$$

The solution of this system of equations is

$$a_1 = \frac{2\mathrm{i}\mu u_0 \alpha}{1 + (\kappa - 1)\alpha^2 + \alpha^4} + a_0 \tag{41}$$

$$b_1 = \frac{2\mathrm{i}\mu u_0 \alpha^3}{1 + (\kappa - 1)\alpha^2 + \alpha^4} + a_0 \tag{42}$$

where it has been assumed, on the basis of a consideration of symmetry, that all the coefficients are purely imaginary, so that for all coefficients $\bar{a}_k = -a_k$. Now that the coefficients a_1 and b_1 have been determined, the other coefficients can be determined successively, using equations

(30) and (31). The value of the very first constant a_0 can be determined from the condition that the coefficients tend towards zero if $k \to \infty$.

For the calculation of the coefficients a_k and b_k a simple computer program has been written.[8] The procedure described above is implemented, in which first the value of a_0 is determined such that the coefficients a_k and b_k tend towards zero for $k \to \infty$. In the program the limiting value of the coefficients for $k \to \infty$ is approximated by the value for $k = 10{,}000$. Next a_1 and b_1 are determined from (39) and (40), and then the remaining coefficients a_k and b_k are determined from (30) and (31). Finally, the coefficients c_k and d_k are determined from (23) and (24).

This procedure has been found to work well, although the number of terms needed for convergence may turn out to be rather large (about 100 or even 1000), if the radius of the tunnel is very large (say $r/h = 0{\cdot}99$ or $r/h = 0{\cdot}999$). For reasonably small values of the radius, say $r/h < 0{\cdot}5$, the series converge with 20 terms or less see Table I. Convergence is supposed to have been obtained if the maximum value of the last term of the series is smaller than 10^{-14} for all values of ζ.

An interesting aspect of the solution is that it is found, by considering the behaviour of the solution in the vicinity of the point $\zeta = 1$, that the stresses tend towards zero at infinity, but that the displacement at infinity tends towards a constant value, not equal to zero. Thus, a uniform contraction of the tunnel, with its centre being fixed, appears to lead to an upward displacement at infinity. This means that in real tunnelling problems, where the centre of the tunnel is not fixed and the point at infinity can be considered to be the non-moving reference, the tunnel will undergo a downward displacement as a whole. This displacement is shown graphically in Figure 3 for various values of v and r/h. The displacement of the top and bottom of the tunnel can be easily related to the displacement of its centre by $v_t = v_c - u_0$ and $v_b = v_c + u_0$. The result that a contraction of the tunnel leads to a downward average displacement means that in a numerical model for this type of problem care must be taken to allow for such a displacement. If uniform radial displacements are simply imposed as a boundary condition, without the possibility of a free vertical displacement, a force of unknown magnitude may be generated in the numerical solution in order to keep the tunnel in its place.

The downward displacement of the tunnel also means that the displacement of the bottom of the tunnel is smaller than the displacement of its top. This is a consequence of the fact that the stiffness of the material above the tunnel is smaller than the stiffness of the material below it. This

Table I. Number of terms needed for convergence

r/h	n
0·1	7
0·2	8
0·3	10
0·4	11
0·5	13
0·6	16
0·7	19
0·8	25
0·9	36
0·99	112
0·999	342
0·9999	1039
0·99999	3155
0·999999	9568

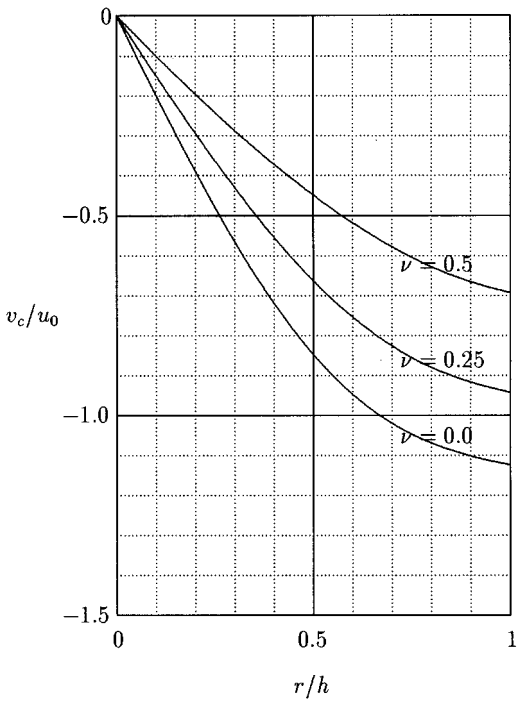

Figure 3. Vertical displacement of tunnel

also means that the apparent spring constant (the ratio of stress and displacement) is not constant along the tunnel boundary. This is shown in Figure 4, for $\nu = 0{\cdot}5$ and $\nu = 0$. The dotted circle indicates the uniform spring constant $2\mu/r$, which applies to a contracting circular tunnel in an infinite elastic medium. The present solution reduces to this value if $r/h \to 0$. The low value of the apparent spring constant near the top of the tunnel has long been recognized by professional engineers, and has been incorporated into the German recommendations for the analysis of the tunnel lining.[9] The relatively high values near the bottom of the tunnel are not recognized in these recommendations, however.

The displacements of the entire field are illustrated, for the case $\nu = 0$ and $r/h = 0{\cdot}8$ in Figure 5. It can be seen from this figure that the displacement of the bottom of the tunnel is downward, in spite of the upward relative displacement due to the contraction of the tunnel. This result is in agreement with those shown in Figure 3.

An interesting quantity is the total volume change ΔV at the surface. For an incompressible material ($\nu = 0{\cdot}5$) this must be equal to the total ground loss at the tunnel circumference. For a soil saturated with water this is the undrained case.[6] If the material is not incompressible, an approximate solution of the problem[10] has indicated that the volume change at the surface may be more than the ground loss of the tunnel, by a factor $2(1 - \nu)$. The present solution allows to verify both results. It appears, by numerical calculation of the volume below the settlement through for various values of r/h, that in the undrained case ($\nu = 0{\cdot}5$) the two volumes are indeed identical, with a relative error of about 0·00001. For other values of ν the volume change at the surface is indeed more than the ground loss, but not so much as predicted by the approximate solution, except for small values for r/h, see Figure 6. The result[10] that the drained volume change

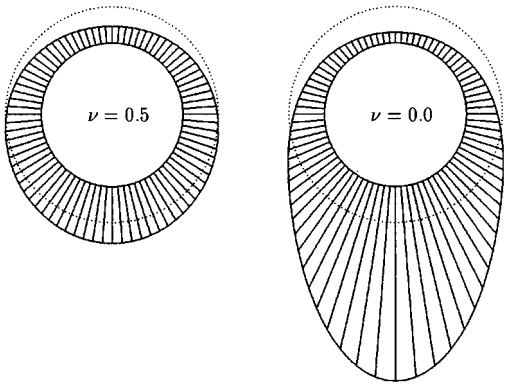

Figure 4. Spring constants along the tunnel boundary, $r/h = 0{\cdot}5$

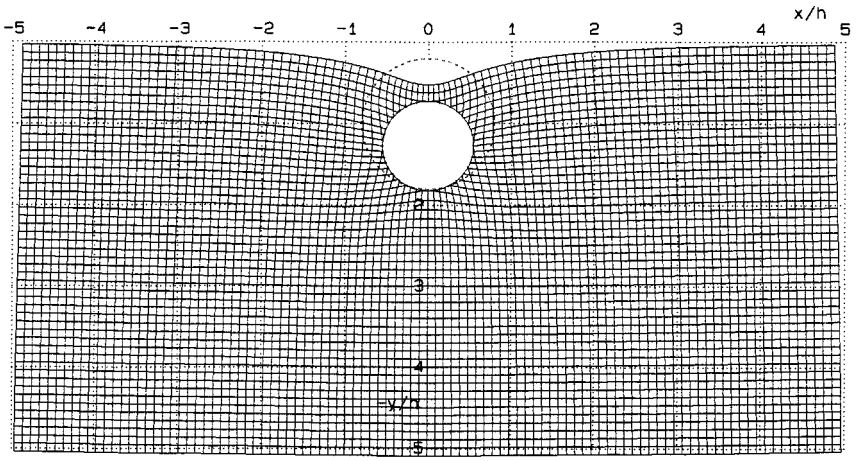

Figure 5. Displacements: $\nu = 0$, $r/h = 0{\cdot}8$

at a surface may be considerably larger than the undrained volume change is confirmed by the analytical solution of this paper.

As a final result, Figure 7 shows the contours of the isotropic stress $\sigma_0 = (\sigma_{xx} + \sigma_{yy})/2$. The contour interval is $0{\cdot}1\mu u_0/h$, and the heavy contour is for $\sigma_0 = 0$. The left-half on the figure shows the contours according to the exact solution presented in this paper. The right-half of the figure shows the contours for an approximate solution.[10] For values of r/h smaller than about 0·5 the approximate solution appears to be reasonably accurate. For larger values of r/h the differences with the approximate solution are increasingly unacceptable.

CONCLUSIONS

It has been shown that the complex variable method can be used successfully for the solution of elasticity problems for a half-plane with a deforming circular tunnel. By using a conformal

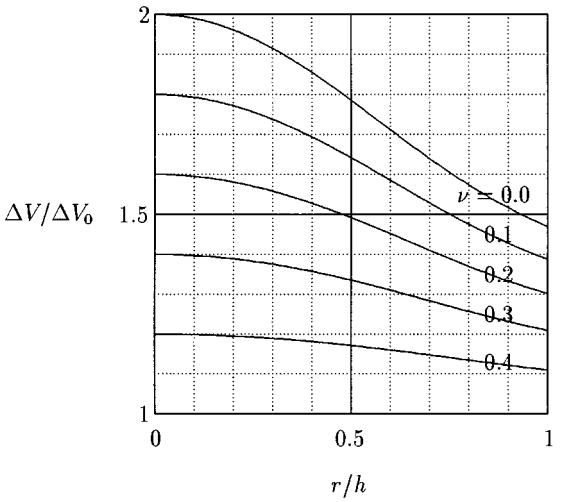

Figure 6. Relative volume change

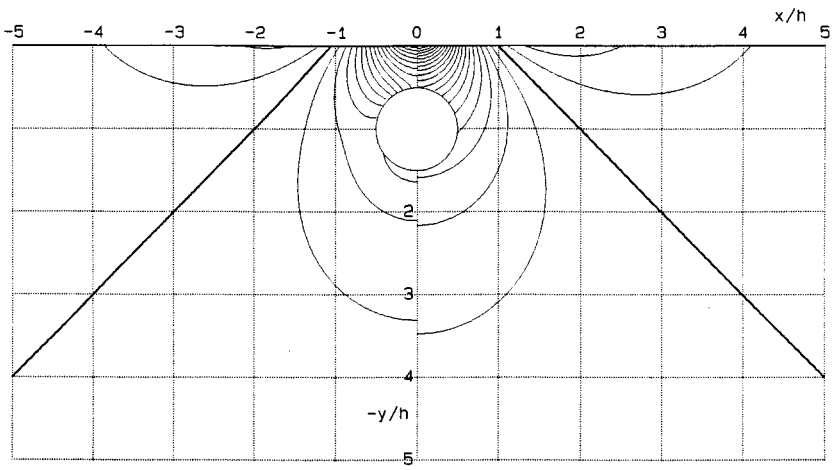

Figure 7. Isotropic stress: $\nu = 0$, $r/h = 0{\cdot}5$

mapping onto a circular ring, it is found that the coefficients of the various terms in the Laurent series expansions of the complex stress functions can be determined from the boundary conditions. In this solution it is required to determine one of the coefficients such that convergence of the Laurent series is ensured. This condition can be satisfied by numerically evaluating the coefficients, and then requiring that the coefficients tend towards zero.

The solution method has been illustrated by calculating the deformations for the case of a uniform radial displacement of the tunnel boundary. The number of terms needed for sufficient accuracy depends upon the geometry, in particular the relative magnitude of the diameter of the tunnel.

REFERENCES

1. N. I. Muskhelishvili, *Some Basic Problems of the Mathematical Theory of Elasticity* (translated from the Russian by J. R. M. Radok), Noordhoff, Groningen, 1953.
2. I. S. Sokolnikoff, *Mathematical Theory of Elasticity*, 2nd edn, McGraw-Hill, New York, 1956.
3. G. B. Jeffery, 'Plane stress and plane strain in bipolar coordinates', *Trans. Roy, Soc. Ser. A*, **221,** 265–293 (1920).
4. E. G. Coker and L. N. G. Filon, *Photo-elasticity*, Cambridge University Press, Cambridge, 1931.
5. R. D. Mindlin, 'Stress distribution around a tunnel', *Trans. ASCE*, 1117–1153 (1940).
6. C. Sagaseta, 'Analysis of undrained soil deformation due to ground loss', *Géotechnique*, **37,** 301–320 (1987).
7. S. P. Timoshenko and J. N. Goodier, *Theory of Elasticity*, 2nd edn, McGraw-Hill, New York, 1951.
8. A. Verruijt, *Complex Variable Solutions of Elastic Tunneling Problems*, Geotechnical Laboratory, Delft University of Technology (available upon request), 1996.
9. H. Duddeck, 'Empfehlungen zur Berechnung von Tunneln im Lockergestein', *Die Bautechnik*, **10,** 349–356 (1980).
10. A. Verruijt and J. R. Booker, 'Surface settlements due to deformation of a tunnel in an elastic half plane', *Géotechnique*, to be published.