Pergamon

Int. J. Solids Structures Vol. 35, No. 21, pp. 2795–2804, 1998
© 1998 Elsevier Science Ltd
All rights reserved. Printed in Great Britain
0020-7683/98 $19.00 + .00

PII: S0020–7683(97)00194–7

DEFORMATIONS OF AN ELASTIC HALF PLANE WITH A CIRCULAR CAVITY

A. VERRUIJT
Delft University of Technology, Faculty of Civil Engineering, Stevinweg 1, 2628 CN Delft, The Netherlands

(*Received* 15 *February* 1997; *in revised form* 23 *June* 1997)

Abstract—An analytical solution is given of the class of problems of an elastic half plane with a circular cavity, loaded on the cavity boundary. The solution uses complex variables, with a conformal mapping onto a circular ring. The coefficients in the Laurent series expansions of the stress functions can be expressed into a single constant by a system of recurrent relations, obtained from the boundary conditions. The remaining constant can be determined from the requirement of convergence of the series. For the case of a uniform radial stress at the cavity boundary the solution can be given in closed form, confirming known results for the stresses, but also giving simple explicit expressions for the displacements. © 1998 Elsevier Science Ltd. All rights reserved.

1. INTRODUCTION

Some decades ago the complex variable method was a popular method for the derivation of solutions of plane elastostatic problems (Muskhelishvili, 1953; Sokolnikoff, 1956; Timoshenko and Goodier, 1970). The method was especially successful for problems for regions that can be mapped conformally onto a circle or a half plane by relatively simple functions. For problems of multiply connected regions, such as problems of stress concentrations in plates with cavities, the method has been used with some success for problems involving circular or elliptical holes in infinite plates. However, in the more general case of problems for regions bounded by two eccentric circles, it is stated (Sokolnikoff, 1956, p. 301) that the "solution of the resulting systems presents difficulties" and it is suggested to use other methods of solution, such as the method using bipolar coordinates. This method had indeed been used successfully to solve a number of problems (Jeffery, 1920; Mindlin, 1940, 1948), in particular problems of an elastic half plane with a circular cavity. In this method the numerical computations are also rather complicated, however, and results are usually restricted to the stress distribution for cavities not too close to the free boundary. Recent work on the determination of stress concentration near cavities uses other analytical and numerical techniques, for instance singular asymptotics analysis (Callias and Markenscoff, 1989), numerical inversion of integral transform solutions (Georgiadis *et al.*, 1995), or boundary integral techniques (Rajapakse and Gross, 1995).

It is the purpose of this paper to show that the difficulties mentioned by Sokolnikoff and Muskhelishvili indeed occur, but that they can be surmounted, by a combination of analytical and numerical analysis. In particular, the requirement of convergence of the series solution will be shown to lead to an additional condition on the coefficients, which is essential to the evaluation of the solution. This may lead to a reappraisal of the complex variable method for problems of elastostatic stress concentration.

The problems considered in this paper refer to a half plane with a circular cavity. The boundary conditions are that the upper boundary of the half plane is free of stress and that at the boundary of the cavity the radial stress is prescribed. As an example the case of a uniform radial stress acting at the cavity boundary will be elaborated. The stresses for this case have been determined long ago by Jeffery (1920), using bipolar coordinates. The present method confirms these results, but it also gives expressions for the displacements, in closed form. The complex variable solution given is more general than this single example, however, and it can be applied, at least in principle, to problems with arbitrary stress

conditions on the cavity boundary. A similar method can be used for the solution of problems with a prescribed displacement at the boundary of the cavity (Verruijt, 1997).

2. STATEMENT OF THE PROBLEM

The problem refers to an elastic half plane with a circular cavity, see Fig. 1. The upper boundary of the half plane is free of stress, and loading takes place along the boundary of the circular cavity, in the form of a given distribution of surface tractions. The radius of the cavity is denoted by r, the depth of its center below the free surface by h, and the cover by d, see Fig. 1. The ratio r/h will be considered as the basic geometrical parameter.

In the complex variable method (Muskhelishvili, 1953; Sokolnikoff, 1956) the solution is expressed in terms of two functions $\phi(z)$ and $\psi(z)$, which must be analytic in the region R occupied by the elastic material (the half plane $y < 0$ with the exclusion of the circular hole). The stresses are related to these functions by the equations

$$\sigma_{xx}+\sigma_{yy} = 2\{\phi'(z)+\overline{\phi'(z)}\}, \tag{1}$$

$$\sigma_{yy}-\sigma_{xx}+2i\sigma_{xy} = 2\{\bar{z}\phi''(z)+\psi'(z)\}, \tag{2}$$

and the displacements are given by

$$2\mu(u_x+iu_y) = \kappa\phi(z)-z\overline{\phi'(z)}-\overline{\psi(z)}, \tag{3}$$

where μ is the shear modulus of the elastic material and κ is related to Poisson's ratio ν by $\kappa = 3-4\nu$ for plane strain and $\kappa = (3-\nu)/(1+\nu)$ for plane stress.

The boundary conditions are that on both boundaries the surface tractions are prescribed. It is most convenient to express the boundary condition in terms of the integral of the surface tractions, integrated along the boundary:

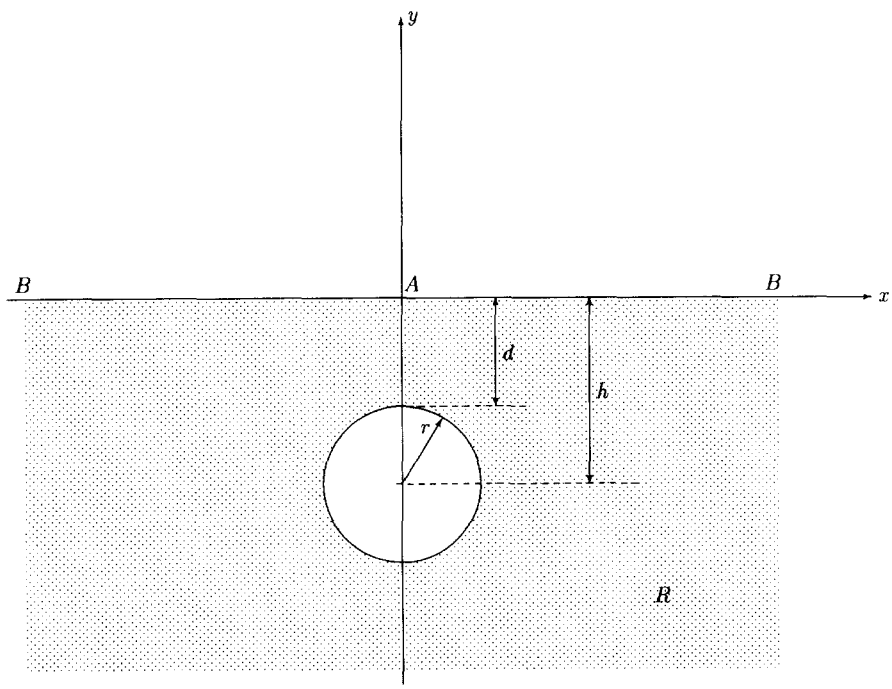

Fig. 1. Half plane with circular cavity.

$$F(s) = F_1 + iF_2 = i\int_{s_0}^{s} (t_x + it_y)\,\mathrm{d}s, \tag{4}$$

where s_0 is some arbitrary point of the boundary. Thus the boundary conditions are (Muskhelishvili, 1953)

$$y = 0 : \phi(z) + z\overline{\phi'(z)} + \overline{\psi(z)} = 0, \tag{5}$$

$$x^2 + (y+h)^2 = r^2 : \phi(z) + z\overline{\phi'(z)} + \overline{\psi(z)} = F(s) + C, \tag{6}$$

where $F(s)$ is a given function of the coordinate s along the cavity boundary, and C is an unknown integration constant. It has been assumed that this constant is zero along the stress-free upper boundary. Such an assumption may be made on one of the boundaries without loss of generality. The precise form of the function $F(s)$ depends upon the actual stress distribution along the cavity boundary. It is assumed that the stresses at the cavity boundary are bounded and form an equilibrium system. In that case the function $F(s)$ is continuous along the entire cavity boundary.

3. THE SOLUTION METHOD

3.1. *Conformal mapping*

It is assumed that the region R in the z-plane can be mapped conformally onto a ring in the ζ-plane, bounded by the circles $|\zeta| = 1$ and $|\zeta| = \alpha$, where $\alpha < 1$, see Fig. 2. This ring shaped region is denoted by γ. The appropriate conformal transformation is

$$z = \omega(\zeta) = -ih\frac{1-\alpha^2}{1+\alpha^2}\frac{1+\zeta}{1-\zeta}, \tag{7}$$

where h is the depth of the center of the cavity, and α is a parameter defined by the ratio (r/h) of the radius and the depth of the cavity.

$$\frac{r}{h} = \frac{2\alpha}{1+\alpha^2}. \tag{8}$$

It can easily be verified that the circle $|\zeta| = 1$ corresponds to the axis $y = 0$, and that the

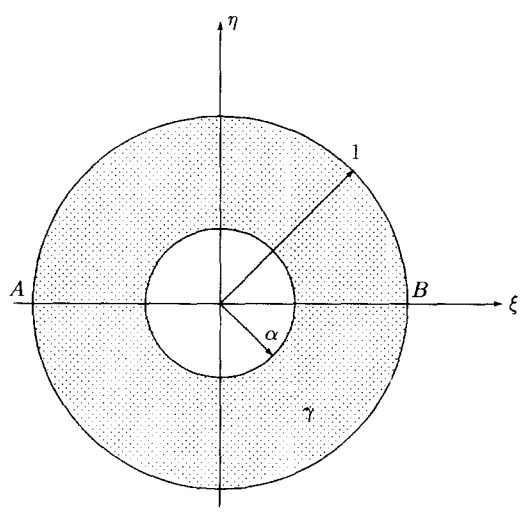

Fig. 2. Plane of conformal transformation.

circle $|\zeta| = \alpha$ corresponds to the circle $x^2+(y+h)^2 = r^2$. The origin in the z-plane is mapped onto $\zeta = -1$, and the point at infinity in the z-plane is mapped onto $\zeta = 1$, see Fig. 1. If $\alpha \to 0$ the radius of the circular cavity is practically zero, which indicates a very deep tunnel, or a very large covering depth. If $\alpha \to 1$ the covering depth is very small. For every value of r/h the corresponding value of α can be determined from eqn (8).

Because the conformal transformation function $\omega(\zeta)$ is analytic in the ring bounded by the circle $|\zeta| = 1$ and $|\zeta| = \alpha$, the functions $\phi(z)$ and $\psi(z)$, which must be analytic throughout the region R in the z-plane, can be considered as functions of ζ,

$$\phi(z) = \phi(\omega(\zeta)) = \phi(\zeta), \tag{9}$$

$$\psi(z) = \psi(\omega(\zeta)) = \psi(\zeta), \tag{10}$$

and they are both analytic in the region γ in the ζ-plane. This means that they can be represented by their Laurent series expansions,

$$\phi(\zeta) = \sum_{k=0}^{\infty} a_k\zeta^k + \sum_{k=1}^{\infty} b_k\zeta^{-k}, \tag{11}$$

$$\psi(\zeta) = \sum_{k=0}^{\infty} c_k\zeta^k + \sum_{k=1}^{\infty} d_k\zeta^{-k}. \tag{12}$$

These series expansions will converge throughout the ring γ, up to the boundaries $|\zeta| = 1$ and $|\zeta| = \alpha$. The point $\zeta = -i$, which corresponds to infinity in the z-plane, deserves some special consideration. Because the stresses at the cavity boundary are restricted to equilibrium systems, it can be assumed that the stresses tend towards zero at infinity, and that the displacements will be bounded at infinity, so that the Laurent series also converge on the boundaries. The coefficients a_k, b_k, c_k and d_k must be determined from the boundary conditions.

The boundary conditions are expressed in terms of the functions $\phi(z)$, $\psi(z)$, and a term $z\overline{\phi'(z)}$, see eqns (5) and (6). When transforming these conditions in terms of the variable ζ the term $z\overline{\phi'(z)}$ needs special attention. Because $\phi'(z)$ is defined as $\mathrm{d}\phi/\mathrm{d}z$ (the accent denoting differentiation with respect to the variable indicated), the derivative with respect to ζ can be written as

$$\phi'(\zeta) = \frac{\mathrm{d}\phi}{\mathrm{d}\zeta} = \frac{\mathrm{d}\phi}{\mathrm{d}z}\frac{\mathrm{d}z}{\mathrm{d}\zeta} = \phi'(z)\omega'(\zeta). \tag{13}$$

It now follows that

$$z\overline{\phi'(z)} = \frac{\omega(\zeta)}{\overline{\omega'(\zeta)}}\overline{\phi'(\zeta)}. \tag{14}$$

The character of the factor $\omega(\zeta)/\overline{\omega'(\zeta)}$ determines the mathematical difficulties involved in solving boundary value problems for a certain type of region.

In the present case the conformal transformation is given by eqn (7). Differentiation of this expression with respect to ζ gives

$$\omega'(\zeta) = -2ih\frac{1-\alpha^2}{1+\alpha^2}\frac{1}{(1-\zeta)^2}. \tag{15}$$

On a circle with radius ρ in the ζ-plane we have $\zeta = \rho\sigma$, where $\sigma = \exp(i\theta)$. Then $\bar{\zeta} = \rho\sigma^{-1}$. This gives

$$\frac{\omega(\zeta)}{\overline{\omega'(\zeta)}} = -\frac{1}{2}\frac{(1+\rho\sigma)(\sigma-\rho)^2}{\sigma^2(1-\rho\sigma)}. \tag{16}$$

In this case, of a circular cavity, this factor appears to be relatively simple. For problems with a cavity of more complicated shape the factor may be so complicated that it practically prohibits analytic solution of the problem.

3.2. *The surface boundary condition*

The first boundary condition is that the upper boundary $y = 0$ must be entirely free of stress, see eqn (5). In the ζ-plane this boundary condition is, with eqn (14),

$$|\zeta| = 1 : \phi(\zeta) + \frac{\omega(\zeta)}{\overline{\omega'(\zeta)}}\overline{\phi'(\zeta)} + \overline{\psi(\zeta)} = 0. \tag{17}$$

On this boundary the radius $\rho = 1$, so that the expression (16) reduces to the simple form

$$|\zeta| = 1 : \frac{\omega(\zeta)}{\overline{\omega'(\zeta)}} = \frac{1}{2}(1-\sigma^{-2}). \tag{18}$$

The boundary condition (17) now gives, after substitution of the series expansions (11) and (12),

$$\sum_{k=1}^{\infty} a_k\sigma^k + \sum_{k=1}^{\infty} b_k\sigma^{-k} + \frac{1}{2}\sum_{k=1}^{\infty}(k+1)\bar{a}_{k+1}\sigma^{-k} - \frac{1}{2}\sum_{k=2}^{\infty}(k-1)\bar{b}_{k-1}\sigma^k$$
$$-\frac{1}{2}\sum_{k=2}^{\infty}(k-1)\bar{a}_{k-1}\sigma^{-k} + \frac{1}{2}\sum_{k=1}^{\infty}(k+1)\bar{b}_{k+1}\sigma^k + a_0 + \frac{1}{2}\bar{a}_1 + \frac{1}{2}\bar{b}_1$$
$$+\bar{c}_0 + \sum_{k=1}^{\infty}\bar{c}_k\sigma^{-k} + \sum_{k=1}^{\infty}\bar{d}_k\sigma^k = 0. \tag{19}$$

The coefficients c_k and d_k can be solved from this equation, by setting the coefficients of all powers of σ equal to zero. The result is

$$c_0 = -\bar{a}_0 - \tfrac{1}{2}a_1 - \tfrac{1}{2}b_1, \tag{20}$$

$$c_k = -\bar{b}_k + \tfrac{1}{2}(k-1)a_{k-1} - \tfrac{1}{2}(k+1)a_{k+1}, \quad k = 1, 2, 3, \ldots, \tag{21}$$

$$d_k = -\bar{a}_k + \tfrac{1}{2}(k-1)b_{k-1} - \tfrac{1}{2}(k+1)b_{k+1}, \quad k = 1, 2, 3, \ldots. \tag{22}$$

One half of the unknown coefficients have now been expressed into the other half. If the coefficients a_k and b_k can be found, the determination of c_k and d_k is explicit and straightforward. The remaining unknown coefficients a_k and b_k must be determined from the boundary condition at the cavity boundary.

3.3. *The cavity boundary condition*

In this paper the first boundary value problem is considered, in which the surface traction is prescribed along the cavity boundary [see eqn (6)]. The transformed form of the boundary condition at the corresponding boundary in the ζ-plane is

$$|\zeta| = \alpha : \phi(\zeta) + \frac{\omega(\zeta)}{\overline{\omega'(\zeta)}}\overline{\phi'(\zeta)} + \overline{\psi(\zeta)} = F(\zeta) + C, \tag{23}$$

where $F(\zeta)$ is a given function, the precise form of which depends upon the stress distribution

along the cavity boundary in the z-plane. Points on the circle $|\zeta| = \alpha$ will be denoted by $\zeta = \alpha\sigma$, where $\sigma = \exp(i\theta)$. Along this circle the value of the first factor in the second term of eqn (23) is, with eqn (16),

$$|\zeta| = \alpha : \frac{\omega(\zeta)}{\overline{\omega'(\zeta)}} = \frac{-\alpha\sigma - (1-2\alpha^2) + \alpha(2-\alpha^2)\sigma^{-1} - \alpha^2\sigma^{-2}}{2(1-\alpha\sigma)}. \tag{24}$$

In contrast with the boundary condition at the outer boundary, where this factor was of a very simple form, see eqn (18), this factor now is of a complicated form, especially because of the appearance of the term $(1-\alpha\sigma)$ in the denominator. In order to eliminate the difficulties caused by this term, the boundary condition (23) is rewritten in the form

$$|\zeta| = \alpha : (1-\alpha\sigma)\left[\phi(\zeta) + \frac{\omega(\zeta)}{\overline{\omega'(\zeta)}}\overline{\phi'(\zeta)} + \overline{\psi(\zeta)}\right] = F^*(\alpha\sigma) + C(1-\alpha\sigma), \tag{25}$$

where

$$F^*(\alpha\sigma) = (1-\alpha\sigma)F(\alpha\sigma). \tag{26}$$

It may be noted that the factor $(1-\alpha\sigma)$ is never equal to zero.

The function $F^*(\alpha\sigma)$, which defines the boundary condition at the cavity boundary, depends upon the polar coordinate θ. It is now assumed that this function can be written as a Fourier series,

$$F^*(\alpha\sigma) = \sum_{k=-\infty}^{+\infty} A_k\sigma^k. \tag{27}$$

It can be expected that for all problems of practical significance such an expansion is possible. An example will be presented below.

Elaboration of the left-hand side of eqn (25), on the basis of the Laurent series expansions (11) and (12), and the expression (24), is a laborious, but basically simple task, leading to sums of positive and negative powers of σ. This leads to a system of equations that must be satisfied for all possible values of σ, which will be the case if the coefficients of all powers of σ are equal in the left- and right-hand side of the equations. This leads to a rather complicated system of equations for the coefficients a_k, b_k, c_k and d_k. However, after elimination of the coefficients c_k and d_k, using eqns (20)–(22), the result is that the coefficients a_k and b_k must satisfy the equations

$$(1-\alpha^{2k+2})a_{k+1} + (1-\alpha^2)(k+1)\overline{b_{k+1}} = \alpha^2(1-\alpha^{2k})a_k + (1-\alpha^2)k\overline{b_k} - A_{k+1}\alpha^{k+1}, \quad k = 1, 2, 3, \ldots, \tag{28}$$

and

$$(1-\alpha^2)\alpha^{2k}(k+1)a_{k+1} + (1-\alpha^{2k+2})\overline{b_{k+1}} = (1-\alpha^2)\alpha^{2k}ka_k + (1-\alpha^{2k})\overline{b_k} - \overline{A_{-k}}\alpha^k, \quad k = 1, 2, 3, \ldots. \tag{29}$$

From these equations the coefficients a_{k+1} and b_{k+1} can be determined, if a_k and b_k are known. This requires the solution of a system of two equations with two unknowns. The solution can be given explicitly, of course, but it may well be more convenient to solve the system numerically.

It may be noted that the homogeneous system (obtained when $A_{k+1} = A_{-k} = 0$) admits a solution

$$A_{k+1} = A_{-k} = 0 : a_{k+1} = -\overline{b_{k+1}} = a_k = -\overline{b_k}. \tag{30}$$

This property will be used later.

Equations for the starting coefficients a_1 and a_2 can be obtained from the conditions that the coefficients of σ^0 and σ^1 must be zero. This gives

$$(1-\alpha^2)(a_1+\overline{b_1})+\bar{C} = -\overline{A_0}, \tag{31}$$

$$(1-\alpha^2)(a_1+\overline{b_1})-C\alpha^2 = -A_1\alpha. \tag{32}$$

It follows from eqns (31) and (32) that

$$\bar{C}+C\alpha^2 = -\overline{A_0}+A_1\alpha, \tag{33}$$

which determines the integration constant C.

All the coefficients can now be determined successively, except for the constants a_0 and $(\overline{a_1}+b_1)$. The constant a_0 represents an arbitrary rigid body displacement, which produces no stresses in the material. It can be left undetermined, or it can be chosen so that a certain given point is fixed, for instance the point at infinity. Of the constants a_1 and b_1 only the combination $(a_1+\overline{b_1})$ is determined by the conditions (31) and (32). Its complex conjugate $(\overline{a_1}+b_1)$ remains undetermined by the equations given above. This difficulty can be resolved by noting that the convergence of the series expressions (11) and (12) for the stress functions ϕ and ψ, for all values of ζ in the ring $\alpha \leqslant |\zeta| \leqslant 1$, and in particular for $\zeta = 1$, requires that all coefficients tend towards zero for $k \to \infty$, and this is not automatically ensured. Because the system of recurrent equations (28) and (29) is linear, and because the homogeneous system of equations admits the solution (30), in which all coefficients a_k and $-\overline{b_k}$ are equal, it follows that an arbitrary constant can be added to each of these coefficients without affecting the solution of the equations given above. Thus, the first constant, say a_1, can be determined by requiring that the coefficients tend towards zero for $k \to \infty$. This can be executed by first assuming the constant a_1 to be zero, then calculating b_1 from eqn (31), and all further coefficients from a repeated application of eqns (28) and (29). It can be expected (and has been verified by performing the actual calculations) that for very large values of k, say $k = 1000$ or $k = 10{,}000$, a constant limiting value, other than zero, is obtained for the coefficients a_k. The correct value of the coefficients can then be found by subtracting that limiting value from a_1 and all further coefficients a_k and $-\overline{b_k}$. The remaining coefficients c_k and d_k can finally be determined from eqns (20)–(22). This completes the solution.

It may be noted that the assumption that the coefficients tend towards zero for $k \to \infty$ implies that a singularity of the form $1/(1-\zeta)$ has been excluded. Inside the unit circle $|\zeta| = 1$ this function can be approximated by the power series

$$1/(1-\zeta) = 1+\zeta+\zeta^2+\zeta^3+\cdots, \tag{34}$$

which converges inside the circle, but not on it. Actually, this is the singularity in the conformal transformation function (7), corresponding to a stress function $\phi = cz$. It can be shown that a stress function $\phi = cz$ denotes a constant stress solution (for real values of c) and a rigid body rotation (for imaginary values of c). The constant stress solution violates the conditions at infinity, and the rigid body rotation may be left undetermined, or may be excluded, without effect on the stresses.

4. EXAMPLE: UNIFORM RADIAL STRESS

As an example the problem of a uniform radial stress of magnitude t at the cavity boundary is considered. A partial solution of this problem, considering the stresses only, has first been given by Jeffery (1920), using bipolar coordinates [see also Coker and Filon

(1931); Timoshenko and Goodier (1951)]. In this case the surface tractions along the cavity boundary are

$$t_x = t\frac{x}{r}, \quad t_y = t\frac{y+h}{r}. \tag{35}$$

According to eqn (4) this must be integrated along the boundary,

$$F = F_1 + iF_2 = i\int_{s_0}^{s}(t_x + it_y)\,\mathrm{d}s = it\int_{s_0}^{s}\frac{z+ih}{r}\,\mathrm{d}s. \tag{36}$$

At the boundary of the cavity $z+ih = r\exp(i\beta)$, where r is the constant radius of the circular cavity and β is the variable angular coordinate. Along the integration path $\mathrm{d}s = r\,\mathrm{d}\beta$, so that

$$F = it\int_0^{\beta}\exp(i\beta)r\,\mathrm{d}\beta = tr[\exp(i\beta)-1] = t(z+ih-r), \tag{37}$$

where it has been assumed that the point s_0 corresponds to $\beta = 0$. With eqn (7) the expression (37) can be expressed in terms of the value of $\zeta = \alpha\sigma$ along the boundary in the ζ-plane,

$$F = \frac{2ith\alpha}{(1+\alpha^2)(1-\alpha\sigma)}[\alpha-\sigma+i(1-\alpha\sigma)]. \tag{38}$$

This means that the function $F^*(\zeta)$, as defined by eqn (26), is

$$F^* = \frac{2ith\alpha}{1+\alpha^2}[\alpha-\sigma+i(1-\alpha\sigma)]. \tag{39}$$

It appears that in this case the boundary function only contains terms of the powers σ^0 and σ^1. The only two non-zero coefficients in the Fourier expansion (27) are

$$A_0 = \frac{2ith\alpha}{1+\alpha^2}(\alpha+i), \quad A_1 = -\frac{2ith\alpha}{1+\alpha^2}(1+i\alpha). \tag{40}$$

The determination of all the coefficients of the solution may now proceed in the way outlined in the previous section. First the integration constant C can be determined from eqn (33). This gives

$$C = \frac{2th\alpha}{1+\alpha^2}. \tag{41}$$

It now follows from either eqn (31) or eqn (32) that

$$a_1 + \overline{b_1} = \frac{2ith\alpha^2}{1-\alpha^4}. \tag{42}$$

Because all coefficients A_{k+1} and A_k in the recurrent eqns (28) and (29) are zero in this case, it can be expected that this system has a very simple solution. Actually, by taking $k = 1$ in these equations one obtains

$$(1+\alpha^2)a_2+2\overline{b_2} = \alpha^2 a_1+\overline{b_1}. \tag{43}$$

$$2\alpha^2 a_2+(1+\alpha^2)\overline{b_2} = \alpha^2 a_1+\overline{b_1}. \tag{44}$$

It appears that the right-hand side of the two equations is the same. This means that the coefficients a_2 and b_2 will be zero if this right-hand side is zero, i.e. if $\overline{b_1} = -\alpha^2 a_1$. Then all further coefficients a_k and b_k will also be zero, as mentioned above as a special solution of the homogeneous system of equations. Thus it can be concluded that convergence of the Laurent series is ensured if and only if $\overline{b_1} = -\alpha^2 a_1$. With eqn (42) it now follows that

$$a_1 = 2iP, \quad b_1 = 2i\alpha^2 P, \tag{45}$$

where

$$P = \frac{\alpha^2 th}{(1-\alpha^2)(1-\alpha^4)}. \tag{46}$$

All coefficients a_k and b_k for $k > 1$ are identically equal to zero.

The last remaining coefficient a_0 can be determined so that the displacement at infinity is zero. It follows from eqns (3) and (5) that this will be the case if $\phi = 0$ for $z = \infty$, that is for $\zeta = 1$. With eqn (11) this gives

$$a_0 = -a_1-b_1 = -2i(1+\alpha^2)P. \tag{47}$$

The other non-zero coefficients in the series expansions for the stress functions now are, with eqns (20)–(22),

$$c_0 = -3i(1+\alpha^2)P, \quad c_1 = 2i\alpha^2 P, \quad c_2 = iP, \tag{48}$$

$$d_1 = 2iP, \quad d_2 = i\alpha^2 P. \tag{49}$$

The stress functions $\phi(\zeta)$ and $\psi(\zeta)$ now are completely determined. They can be written in full as

$$\frac{\phi(\zeta)}{P} = -2i(1+\alpha^2)+2i\zeta+\frac{2i\alpha^2}{\zeta}, \tag{50}$$

$$\frac{\psi(\zeta)}{P} = -3i(1+\alpha^2)+2i\alpha^2\zeta+i\zeta^2+\frac{2i}{\zeta}+\frac{i\alpha^2}{\zeta^2}. \tag{51}$$

From these simple expressions all the stresses and the displacements may be obtained. This enables, for instance, to verify that the boundary conditions along the two boundaries are identically satisfied. No details of the calculations will be given, as they are all straightforward. The expressions for the stresses are all in agreement with Jeffrey's solution (Coker and Filon, 1931). The present solution also enables us to obtain closed form expressions for the displacements.

5. CONCLUSIONS

It has been shown that the complex variable method can be used successfully for the solution of elasticity problems for a half plane with a circular cavity. By using a conformal mapping onto a circular ring, it is found that the coefficients of the various terms in the Laurent series expansions of the complex stress functions can be determined from the

boundary conditions. In this solution it is required to determine one of the coefficients such that convergence of the Laurent series is ensured. This condition can be satisfied by numerically evaluating the coefficients, and then requiring that the coefficients tend towards zero. The solution method has been illustrated by calculating the deformations for the case of a uniform stress applied at the cavity boundary.

Acknowledgements—The possibility that the complex variable method might be used to find an analytical and exact solution for problems of a half plane with a circular cavity, came up in discussions with Professor John R. Booker of Sydney University, during a visit to Australia made possible by the Delft University Foundation. The author wishes to thank Professor Y. Z. Chen of Jiangsu University of Science and Technology, Zhenjiang, P.R. China, for pointing out the importance of the integration constant in the boundary conditions.

REFERENCES

Callias, C. J. and Markenscoff, X. (1989) Singular asymptotics analysis for the singularity at a hole near a boundary. *Quarterly Applied Mathematics* **47,** 233–245.

Coker, E. G. and Filon, L. N. G. (1931) *Photo-elasticity*. Cambridge University Press, Cambridge.

Georgiadis, H. G., Rigatos, A. P. and Charalambakis, N. C. (1995) Dynamic stress concentration around a hole in a viscoelastic plate. *Acta Mechanica* **111,** 1–12.

Jeffery, G. B. (1920) Plane stress and plane strain in bipolar coordinates. *Transactions of the Royal Society Series A* **221,** 265–293.

Mindlin, R. D. (1940) Stress distribution around a tunnel. *Transactions of the ASCE*, 1117–1153.

Mindlin, R. D. (1948) Stress distribution around a hole near the edge of a plate under tension. *Proceedings of the Society of Experimental Stress Analysis* **5,** 56–67.

Muskhelishvili, N. I. (1953) *Some Basic Problems of the Mathematical Theory of Elasticity*, translated from the Russian by J. R. M. Radok. Noordhoff, Groningen.

Rajapakse, R. K. N. D. and Gross, D. (1995) Transient response of an orthotropic elastic medium with a cavity. *Wave Motion* **21,** 231–252.

Sokolnikoff, I. S. (1956) *Mathematical Theory of Elasticity*, 2nd edn. McGraw-Hill, New York.

Timoshenko, S. P. and Goodier, J. N. (1970) *Theory of Elasticity*, 3rd edn. McGraw-Hill, New York.

Verruijt, A. (1997) A complex variable solution for a deforming circular tunnel in an elastic half-plane. *International Journal of Numerical and Analytical Methods in Geomechanics* **21,** 77–89.

Verruijt, A. and Booker, J. R. (1996) Surface settlements due to deformation of a tunnel in an elastic half plane. *Géotechnique* **46,** 753–756.