COMPLEX VARIABLE SOLUTION OF MINDLIN'S PROBLEM OF AN EXCAVATED TUNNEL

Arnold Verruijt and John R. Booker

Sydney, November 1996

Delft, 2000, 2009

Background material of the publication by Verruijt & Booker (2000)

1. Introduction

In an earlier report (Verruijt, 1996) it has been shown that certain problems of stresses and deformations caused by deformation of a tunnel in an elastic half plane can be solved by the complex variable method, as described by Muskhelishvili (1953). The geometry of the problems is that of a half plane with a circular cavity, see figure 1.1. The boundary conditions are that the upper boundary of the half plane is free of

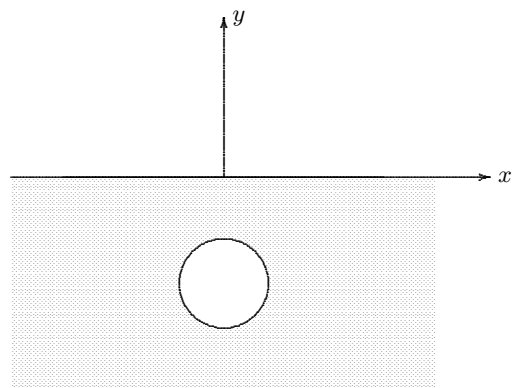

Figure 1.1. Half plane with circular cavity

stress, and that the boundary of the cavity undergoes a certain prescribed displacement, for instance a uniform radial displacement, or that at the boundary of the cavity given surface stresses are applied, for instance a uniform radial stress.

In this report Mindlin's problem of a circular cavity in an elastic half plane loaded by gravity is considered, see the left part of figure 1.2. The characteristics of this problem are that the stresses and

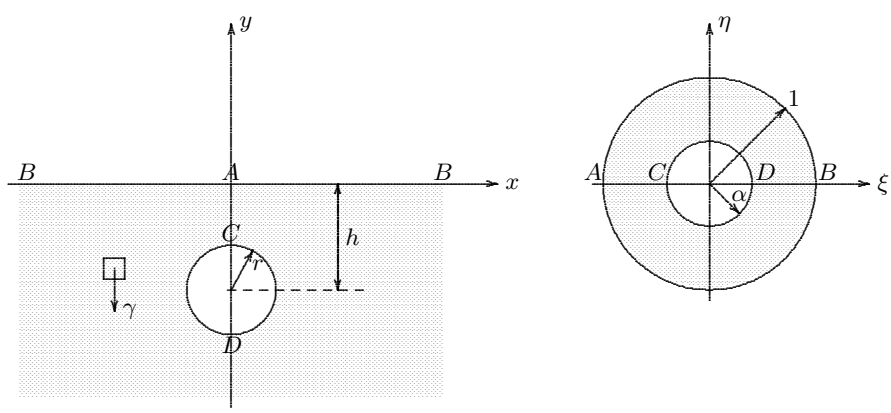

Figure 1.2. Mindlin's problem

strains due to the removal of the material inside a circular cavity are to be determined, with the stresses at infinity being determined by the action of gravity.

The problem will be solved by using the complex variable method, with a conformal mapping of the region in the z-plane onto a circular ring in the ζ-plane, see the right part of figure 1.2.

1.1 Statement of Mindlin's problem

The problem will first be defined by giving all the relevant equations and the boundary conditions.

Equilibrium of the material requires that

$$\frac{\partial \sigma_{xx}}{\partial x} + \frac{\partial \sigma_{yx}}{\partial y} = 0, \tag{1.1}$$

$$\frac{\partial \sigma_{xy}}{\partial x} + \frac{\partial \sigma_{yy}}{\partial y} - \gamma = 0, \tag{1.2}$$

where γ is the unit weight of the material. It has been assumed that gravity acts in negative y-direction.

The stresses are related to the displacements through Hooke's law,

$$\sigma_{xx} = \lambda e + 2\mu \frac{\partial u_x}{\partial x}, \tag{1.3}$$

$$\sigma_{yy} = \lambda e + 2\mu \frac{\partial u_y}{\partial y}, \tag{1.4}$$

$$\sigma_{xy} = \sigma_{yx} = \mu(\frac{\partial u_x}{\partial y} + \frac{\partial u_y}{\partial x}), \tag{1.5}$$

where e is the volume strain,

$$e = \frac{\partial u_x}{\partial x} + \frac{\partial u_y}{\partial y}. \tag{1.6}$$

Boundary conditions must be specified along all boundaries.

The condition at infinity is assumed to be that at infinity the stresses should approach the following limiting values.

$$\sigma_{yy} = \gamma y, \tag{1.7}$$

$$\sigma_{xx} = K_0 \gamma y, \tag{1.8}$$

$$\sigma_{xy} = 0, \tag{1.9}$$

where γ is the unit weight of the material, and K_0 is a given constant, the coefficient of lateral earth pressure. These conditions are imposed because this is a possible solution for the problem without the cavity. In soil mechanics the coefficient K_0 is considered to be an independent parameter, determined by the geological history of the material during and after deposition. It is assumed that the excavation of the cavity will result in a local disturbance only, so that the stresses at infinity are not affected.

The boundary conditions along the upper surface $y = 0$ are that this boundary is free of external stress,

$$y = 0 \ : \ \sigma_{yx} = 0, \tag{1.10}$$

$$y = 0 \ : \ \sigma_{yy} = 0. \tag{1.11}$$

The boundary conditions along the cavity boundary are that this boundary is also free of external stress. These conditions can most conveniently be formulated in terms of the surface tractions t_x and t_y, see figure 1.3. These surface tractions can be related to the stresses by the equations

$$t_x = -\sigma_{xx} \sin\beta + \sigma_{xy} \cos\beta, \tag{1.12}$$

$$t_y = -\sigma_{xy} \sin\beta + \sigma_{yy} \cos\beta, \tag{1.13}$$

where β is the angle of the line connecting a point on the cavity boundary and the center of the cavity, with the vertical axis, see figure 1.3. The boundary conditions along the cavity boundary are

$$x = r\sin\beta, y = -h - r\cos\beta \ : \ t_x = -\sigma_{xx} \sin\beta + \sigma_{xy} \cos\beta = 0, \tag{1.14}$$

$$x = r\sin\beta, y = -h - r\cos\beta \ : \ t_y = -\sigma_{xy} \sin\beta + \sigma_{yy} \cos\beta = 0. \tag{1.15}$$

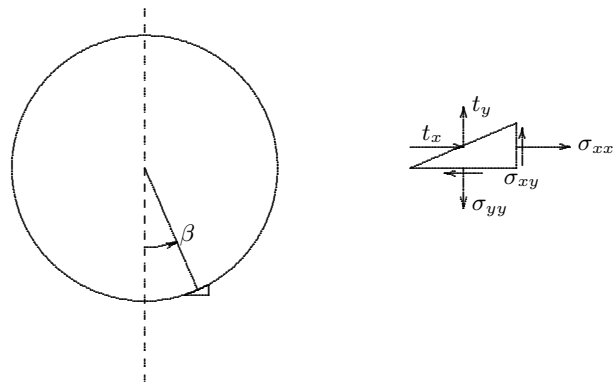

Figure 1.3. Stresses along cavity boundary

1.2 The solution method

The problem is solved by a superposition of three partial solutions, which will be considered separately in further chapters of this report.

The first partial solution represents the stresses due to gravity in the half plane $y < 0$, without the cavity. This is a simple elementary solution.

The second partial solution is Melan's solution for a concentrated vertical force in a half plane, representing the effect of the removal of the weight of the material. This solution, which can be found in the literature, will be rederived, and formulated in terms of complex potentials.

The third (and final) part of the solution applies to the half plane with a circular cavity, such that the stresses at the cavity boundary are annulled. The general solution of this problem has been given in chapters 7 and 8 of the earlier report (Verruijt, 1996), and will be presented briefly in this report. The solution requires the representation of a function F, representing the integrated surface tractions along the cavity boundary, in the form of a Fourier series, with the periodic parameter θ being the angular coordinate along the inner boundary CDC in the ζ-plane. This function F is related to the complex stress functions $\phi(z)$ and $\psi(z)$ by

$$F = i \int_0^s (t_x + it_y)\, ds = \phi(z) + z\overline{\phi'(z)} + \overline{\psi(z)} - C, \tag{1.16}$$

where t_x and t_y are the components of the surface tractions, and where C is an arbitrary integration constant. In the ζ-plane the function F is to be considered along the boundary $\zeta = \alpha\sigma = \alpha \exp(i\theta)$. Its Fourier series expansion is written as

$$F(\theta) = \sum_{k=-\infty}^{\infty} B_k \exp(ik\theta). \tag{1.17}$$

In order to determine the coefficients B_k using Fourier analysis it is required not only to solve the first two partial problems, but also to determine the value of the function F for these two parts of the solution, as a function of θ. This will be elaborated in the next two chapters.

2. First partial solution : stresses due to gravity

The stresses due to gravity in an undisturbed half plane $y < 0$ are supposed to be

$$\sigma_{yy} = \gamma y, \tag{2.1}$$

$$\sigma_{xx} = K_0 \gamma y, \tag{2.2}$$

$$\sigma_{xy} = 0, \tag{2.3}$$

where γ is the unit weight of the material, and K_0 is a given constant, the coefficient of lateral earth pressure. In Mindlin's original paper (Mindlin, 1940) only the values $K_0 = 0$, $K_0 = 1$ and $K_0 = \nu/(1-\nu)$ were considered. Here the value of the coefficient K_0 is considered as an independent parameter,

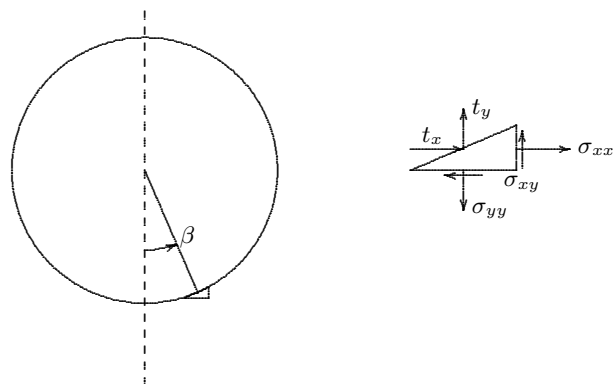

Figure 2.1. Surface tractions along circular boundary

determined by the geological history.

In order to be able to later annul the surface tractions along the cavity boundary the surface tractions at this boundary due to the first partial solution must be determined. These surface tractions along the cavity boundary (see figure 2.1) can be related to the stresses by the equations (1.12) and (1.13). In this case these surface tractions are found to be

$$t_x = -K_0 \gamma y \sin\beta, \tag{2.4}$$

$$t_y = \gamma y \cos\beta. \tag{2.5}$$

The boundary function F is defined by (1.16),

$$F = i \int_0^s (t_x + i t_y)\, ds, \tag{2.6}$$

where the integration path should be such that the material (outside the cavity) lies to the left, when traveling along the integration path. This means that $ds = -r\, d\beta$. Because on the boundary of the cavity $y = -h - r\cos\beta$, it follows that the boundary function F for this part of the solution, which will be denoted by F_1, is

$$\frac{F_1}{\gamma r} = -\int_0^\beta [h\cos\beta + r\cos^2\beta]\, d\beta - iK_0 \int_0^\beta [h\sin\beta + r\sin\beta\cos\beta]\, d\beta. \tag{2.7}$$

Elaboration of the integrals gives

$$\frac{F_1}{\gamma r} = -\tfrac{1}{2} r\beta - \tfrac{1}{4} r\sin 2\beta - h\sin\beta - iK_0[h(1-\cos\beta) + \tfrac{1}{4} r(1-\cos 2\beta)]. \tag{2.8}$$

The first term in the right hand member of eq. (2.8), $-\frac{1}{2}r\beta$, is the only one that is not periodic when the circular cavity boundary is traversed, from $\beta = 0$ to $\beta = 2\pi$. This is because the integral over the entire cavity boundary represents the resultant force, which is equal to the total weight of the material ($\gamma\pi r^2$) inside the cavity. Before attempting to annul the stresses along the cavity boundary, the solution of Melan for a force in a half plane will be added as the second part of the total solution, in order to balance the resultant force first.

The expression (2.8) gives the integrated surface traction F_1 as a function of β, the angular coordinate along the circular boundary in the z-plane, see figure 2.1. Later this quantity is needed, however, as a function of θ, the angle along the inner circular boundary in the ζ-plane. For that reason we will now first derive a relation between these two angles.

The conformal transformation is

$$z = \omega(\zeta) = -ih\,\frac{1-\alpha^2}{1+\alpha^2}\,\frac{1+\zeta}{1-\zeta}, \tag{2.9}$$

where α defines the geometric parameter r/h, the ratio of the radius of the circular cavity to its depth, see figure 1.2,

$$\frac{r}{h} = \frac{2\alpha}{1+\alpha^2}. \tag{2.10}$$

Along the inner circular boundary in the ζ-plane $\zeta = \alpha\sigma = \alpha\exp(i\theta)$. With (2.9) this gives, after some mathematical manipulations,

$$\frac{x}{r} = \frac{(1-\alpha^2)\sin\theta}{(1+\alpha^2) - 2\alpha\cos\theta}, \tag{2.11}$$

$$\frac{y+h}{r} = -\frac{(1+\alpha^2)\cos\theta - 2\alpha}{(1+\alpha^2) - 2\alpha\cos\theta}. \tag{2.12}$$

It can easily be verified that these equations indeed represent a circle of radius r around a point at a depth h, because

$$x^2 + (y+h)^2 = r^2. \tag{2.13}$$

The angle β can be expressed as

$$\tan\beta = -\frac{x}{y+h} = \frac{(1-\alpha^2)\sin\theta}{(1+\alpha^2)\cos\theta - 2\alpha}. \tag{2.14}$$

Special care should be taken to ensure that the value of β is defined such that it varies continuously from $\beta = 0$ to $\beta = 2\pi$ in the interval from $\theta = 0$ to $\theta = 2\pi$. This can be accomplished by modifying the standard function $t = \arctan(y/x)$ in such a way that for values of x and y in the four quadrants the value of the function varies continuously from 0 to 2π when θ varies from 0 to 2π. The function is denoted as $t = \mathrm{at}(x, y)$, and it is defined by the following C-function.

```
double at(double x,double y)
 {
  double ax,ay,a,t,pi;
  pi=4*atan(1);ax=fabs(x);ay=fabs(y);a=atan(ay/ax);
  if (y<0) {if (x<0) t=pi+a;else t=2*pi-a;}
  else {if (x<0) t=pi-a;else t=a;}
  return(t);
 }
```

The function F_1 can be calculated from the formula (2.8), which can also be written as

$$\frac{F_1}{\gamma\pi r^2} = -\frac{\beta}{2\pi} - \frac{\sin 2\beta}{4\pi} - \frac{1}{\pi}\frac{h}{r}\sin\beta - \frac{iK_0}{\pi}\big[\frac{h}{r}(1-\cos\beta) + \tfrac{1}{4}(1-\cos 2\beta)\big], \tag{2.15}$$

where the value of β can be calculated from the the relations

$$\frac{x}{h} = \frac{r}{h}\frac{(1-\alpha^2)\sin\theta}{(1+\alpha^2)-2\alpha\cos\theta}, \tag{2.16}$$

$$\frac{y}{h} = -1 - \frac{r}{h}\frac{(1+\alpha^2)\cos\theta-2\alpha}{(1+\alpha^2)-2\alpha\cos\theta}, \tag{2.17}$$

$$\beta = \mathrm{at}(-\frac{y}{h}-1, \frac{x}{h}). \tag{2.18}$$

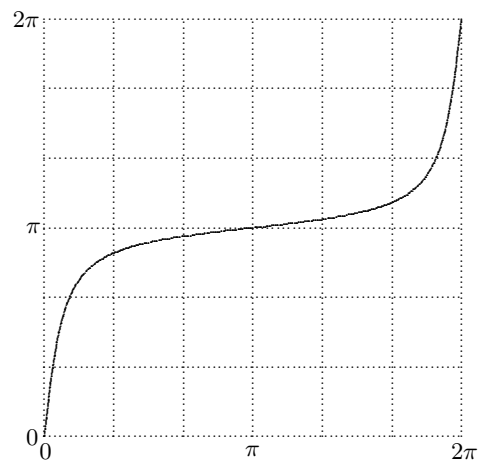

Figure 2.2. β as a function of θ, for $\alpha = 0.8$

As an example the relation between θ and β for $\alpha = 0.8$ is shown in figure 2.2. The data for this figure have been calculated using the C-function given above. It may be noted that for $\theta = 0$ the function $F_1 = 0$, which is a consequence of its definition. For $\theta = 2\pi$ we have $\beta = 2\pi$.

3. Second partial solution : Melan's solution

The second part of the solution is Melan's solution for a concentrated force in vertical direction, applied at a depth h in the half plane $y < 0$, see figure 3.1. This represents one of the major effects of the excavation

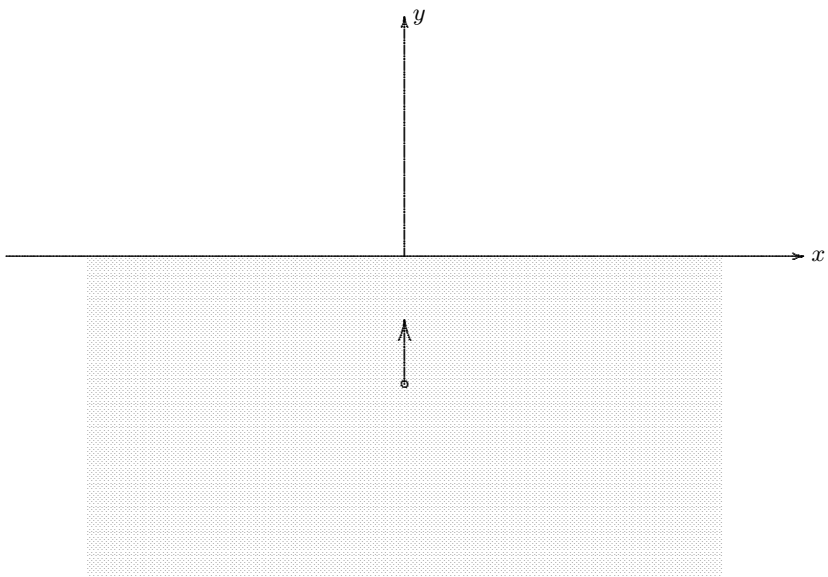

Figure 3.1. Half plane with concentrated force

of a tunnel, in particular the effect of the different weight of the tunnel compared to the weight of the excavated soil. If the weight of the tunnel is zero, the force in upward direction is $\gamma\pi r^2$.

In the literature three methods are used to derive the solution: bipolar coordinates, complex variables and Fourier transforms. This chapter mainly follows the presentation of Sneddon (1951), with some more details, and using complex variable notations as far as possible. Except for an irrelevant difference in notation the solution presented in this chapter is in agreement with the results given by Sneddon (1951) for this problem.

3.1 Force in infinite medium

For a concentrated force P in the negative y-direction, applied at the point $z = ih$ of an infinite medium, see figure 3.2, the complex potentials are supposed to be

$$\phi(z) = \frac{iP}{8\pi(1-\nu)} \log(z - ih), \tag{3.1}$$

$$\psi(z) = \frac{iP}{8\pi(1-\nu)} \big[(3-4\nu)\log(z-ih) + \frac{z}{z-ih}\big]. \tag{3.2}$$

The validity of these functions is postulated here. Because the functions are analytic throughout the entire plane, except at the point $z = ih$ and at infinity, the basic equations of the theory of plane strain elasticity are automatically satisfied. It will be shown in this section that the singularity in $z = ih$ indeed describes a concentrated force of magnitude P.

It follows from (3.1) and (3.2) that

$$\phi'(z) = \frac{iP}{8\pi(1-\nu)} \frac{1}{z-ih}, \tag{3.3}$$

$$\phi''(z) = -\frac{iP}{8\pi(1-\nu)} \frac{1}{(z-ih)^2}, \tag{3.4}$$

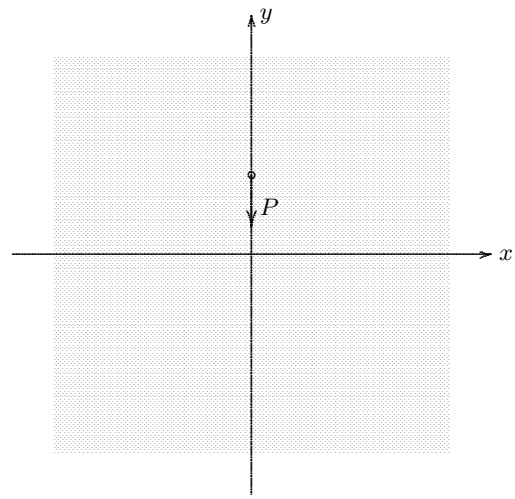

Figure 3.2. Force in infinite medium

$$\psi'(z) = \frac{iP}{2\pi}\,\frac{1}{z-ih} - \frac{iP}{8\pi(1-\nu)}\,\frac{z}{(z-ih)^2}, \tag{3.5}$$

The stresses can be determined from the Kolosov-Muskhelishvili formulas,

$$\sigma_{xx} + \sigma_{yy} = 2[\phi'(z) + \overline{\phi'(z)}], \tag{3.6}$$

$$\sigma_{yy} - \sigma_{xx} + 2i\sigma_{xy} = 2[\overline{z}\phi''(z) + \psi'(z)]. \tag{3.7}$$

This gives

$$\sigma_{xx} + \sigma_{yy} = \frac{Py_1}{2\pi(1-\nu)r_1^2}, \tag{3.8}$$

$$\sigma_{yy} - \sigma_{xx} = \frac{Py_1}{2\pi(1-\nu)r_1^2}\big[-2\nu + \frac{2y_1^2}{r_1^2}\big], \tag{3.9}$$

$$2\sigma_{xy} = \frac{Px}{2\pi(1-\nu)r_1^2}\big[(1-2\nu) + \frac{2y_1^2}{r_1^2}\big], \tag{3.10}$$

where

$$r_1^2 = x^2 + y_1^2 = x^2 + (y-h)^2. \tag{3.11}$$

The stresses are found to be

$$\sigma_{xx} = \frac{Py_1}{4\pi(1-\nu)r_1^2}\big[(1+2\nu) - \frac{2y_1^2}{r_1^2}\big], \tag{3.12}$$

$$\sigma_{yy} = \frac{Py_1}{4\pi(1-\nu)r_1^2}\big[(1-2\nu) + \frac{2y_1^2}{r_1^2}\big], \tag{3.13}$$

$$\sigma_{xy} = \frac{Px}{4\pi(1-\nu)r_1^2}\big[(1-2\nu) + \frac{2y_1^2}{r_1^2}\big]. \tag{3.14}$$

In polar coordinates around the point $z = ih$, see figure 3.3, these expressions can be written as

$$\sigma_{xx} = \frac{P}{4\pi(1-\nu)r_1}\,\sin\theta_1\big[(1+2\nu) - 2\sin^2\theta_1\big], \tag{3.15}$$

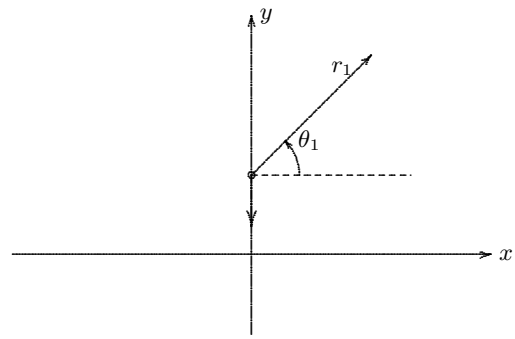

Figure 3.3. Polar coordinates

$$\sigma_{yy} = \frac{P}{4\pi(1-\nu)r_1} \sin\theta_1 \big[(1-2\nu) + 2\sin^2\theta_1\big], \tag{3.16}$$

$$\sigma_{xy} = \frac{P}{4\pi(1-\nu)r_1} \cos\theta_1 \big[(1-2\nu) + 2\sin^2\theta_1\big]. \tag{3.17}$$

The component in y-direction of the traction upon an element of a circle around $z = ih$ is denoted by t_y, see figure 3.4. The magnitude of this surface traction can be expressed into the stress components by

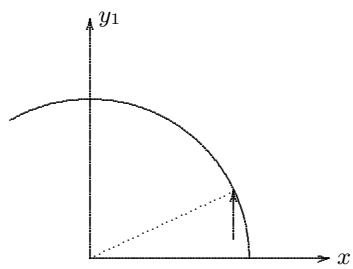

Figure 3.4. Surface traction

the relation

$$t_y = -\sigma_{yy}\sin\theta_1 - \sigma_{yx}\cos\theta_1. \tag{3.18}$$

With (3.16) and (3.17) this gives, after some trigonometric substitutions,

$$t_y = -\frac{P}{2\pi r_1} + \frac{P}{4\pi(1-\nu)r_1}\cos 2\theta_1. \tag{3.19}$$

This expression shows that the stress distribution indeed describes the case of a concentrated force of magnitude $-P$ applied at $z = ih$, because the integrated surface traction along any circle of radius r_1 equals $-P$,

$$\int_0^{2\pi} t_y\, r_1 d\theta_1 = -P. \tag{3.20}$$

In a similar way it can be shown that the resulting force in x-direction is zero, and that the resulting moment also vanishes.

For the sake of completeness the stress components will also be expressed in polar coordinates. These can be obtained using the general relations

$$\sigma_{rr} = \sigma_{xx}\cos^2\theta_1 + \sigma_{yy}\sin^2\theta_1 + 2\sigma_{xy}\sin\theta_1\cos\theta_1, \tag{3.21}$$

$$\sigma_{tt} = \sigma_{xx}\sin^2\theta_1 + \sigma_{yy}\cos^2\theta_1 - 2\sigma_{xy}\sin\theta_1\cos\theta_1, \tag{3.22}$$

$$\sigma_{rt} = (\sigma_{yy} - \sigma_{xx}) \sin\theta_1 \cos\theta_1 + \sigma_{xy}(\cos^2\theta_1 - \sin^2\theta_1). \tag{3.23}$$

Using these relations it follows that

$$\sigma_{rr} = \frac{P}{4\pi(1-\nu)r}(3-2\nu)\sin\theta_1, \tag{3.24}$$

$$\sigma_{tt} = -\frac{P}{4\pi(1-\nu)r}(1-2\nu)\sin\theta_1, \tag{3.25}$$

$$\sigma_{rt} = \frac{P}{4\pi(1-\nu)r}(1-2\nu)\cos\theta_1. \tag{3.26}$$

The formulation in terms of complex potentials enables to derive closed form expressions for the displacements, using the formula

$$2\mu(u_x + iu_y) = \kappa\phi(z) - z\overline{\phi'(z)} - \overline{\psi(z)}, \tag{3.27}$$

where for plane strain

$$\kappa = \frac{\lambda + 3\mu}{\lambda + \mu} = 3 - 4\nu. \tag{3.28}$$

With (3.1), (3.3) and (3.2) this gives

$$2\mu(u_x + iu_y) = \frac{iP}{4\pi(1-\nu)}\big[(3-4\nu)\log r_1 + \cos\theta_1 \exp(2i\theta_1)\big]. \tag{3.29}$$

Separation into real and imaginary parts gives

$$u_x = -\frac{P}{8\pi\mu(1-\nu)}\ \sin\theta_1\cos\theta_1, \tag{3.30}$$

$$u_y = \frac{P}{8\pi\mu(1-\nu)}\big[(3-4\nu)\log r_1 + \cos^2\theta_1\big]. \tag{3.31}$$

In terms of x and y_1 these expressions can be written as follows

$$u_x = -\frac{P}{8\pi\mu(1-\nu)}\ \frac{xy_1}{r_1^2}, \tag{3.32}$$

$$u_y = \frac{P}{8\pi\mu(1-\nu)}\big[(3-4\nu)\log r_1 + \frac{x^2}{r_1^2}\big]. \tag{3.33}$$

To these displacements an arbitrary rigid body displacement may be added, to ensure that a certain point in the field is fixed in space. The displacements at the singular point $z = ih$ are unbounded, and so are the displacements at infinity.

The expressions given above are in agreement (perhaps apart from a rigid body displacement) with those given in the literature (Sneddon, 1951; Green & Zerna, 1954). The solution for the stresses was given by Melan (1932), see also Coker & Filon (1931).

3.2 Force in semi-infinite medium

The solution for a concentrated force in the interior of a semi-infinite medium is built up of three solutions: the solution for a concentrated force at $x = 0, y = h$, a force in opposite direction at $x = 0, y = -h$, and a balancing stress distribution to be determined such that the normal stresses at the boundary $y = 0$ vanish.

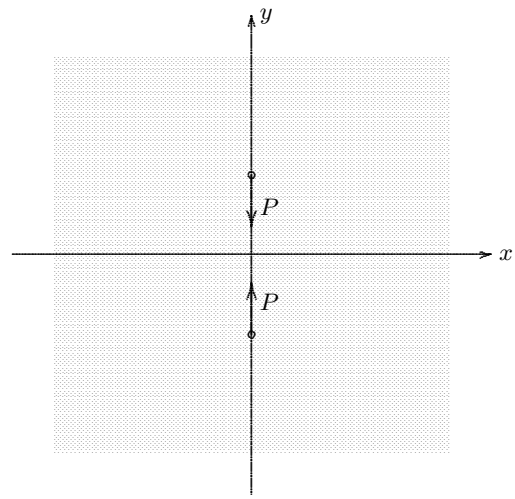

Figure 3.5. Two opposite forces

3.2.1 Force and image force

On the basis of the solution presented in the previous section the solution for a force at $z = ih$ and an image force of opposite direction at $z = -ih$, see figure 3.5, can be written as

$$\phi(z) = \frac{iP}{8\pi(1-\nu)} \log \frac{z-ih}{z+ih}, \tag{3.34}$$

$$\psi(z) = \frac{iP}{8\pi(1-\nu)} \big[(3-4\nu) \log \frac{z-ih}{z+ih} + \frac{z}{z-ih} - \frac{z}{z+ih}\big]. \tag{3.35}$$

Differentiation of these expressions with respect to z gives

$$\phi'(z) = \frac{iP}{8\pi(1-\nu)} [\frac{1}{z-ih} - \frac{1}{z+ih}], \tag{3.36}$$

$$\phi''(z) = -\frac{iP}{8\pi(1-\nu)} [\frac{1}{(z-ih)^2} - \frac{1}{(z+ih)^2}], \tag{3.37}$$

$$\psi'(z) = \frac{iP}{2\pi} [\frac{1}{z-ih} - \frac{1}{z+ih}] - \frac{iP}{8\pi(1-\nu)} [\frac{z}{(z-ih)^2} - \frac{z}{(z+ih)^2}]. \tag{3.38}$$

Using the Kolosov-Muskhelishvili formulas (3.6) and (3.7) it follows that

$$\sigma_{xx} = \frac{P}{4\pi(1-\nu)} \Big\{(1+2\nu)\big[\frac{y_1}{r_1^2} - \frac{y_2}{r_2^2}\big] - \frac{2y_1^3}{r_1^4} + \frac{2y_2^3}{r_2^4}\Big\}, \tag{3.39}$$

$$\sigma_{yy} = \frac{P}{4\pi(1-\nu)} \Big\{(1-2\nu)\big[\frac{y_1}{r_1^2} - \frac{y_2}{r_2^2}\big] + \frac{2y_1^3}{r_1^4} - \frac{2y_2^3}{r_2^4}\Big\}, \tag{3.40}$$

$$\sigma_{xy} = \frac{P}{4\pi(1-\nu)} \Big\{(1-2\nu)\big[\frac{x}{r_1^2} - \frac{x}{r_2^2}\big] + \frac{2xy_1^2}{r_1^4} - \frac{2xy_2^2}{r_2^4}\Big\}, \tag{3.41}$$

where r_1 is the distance from the point $x = 0, y = h$, and r_2 is the distance from the point $x = 0, y = -h$,

$$r_1^2 = x^2 + y_1^2 = x^2 + (y-h)^2, \tag{3.42}$$

$$r_2^2 = x^2 + y_2^2 = x^2 + (y+h)^2. \tag{3.43}$$

The displacements are, using (3.27),

$$u_x = -\frac{P}{8\pi\mu(1-\nu)}\,\big[\frac{xy_1}{r_1^2} - \frac{xy_2}{r_2^2}\big], \tag{3.44}$$

$$u_y = \frac{P}{8\pi\mu(1-\nu)}\big[(3-4\nu)\log\frac{r_1}{r_2} + \frac{x^2}{r_1^2} - \frac{x^2}{r_2^2}\big]. \tag{3.45}$$

Because of the symmetry of the problem it is now found that the displacements at the origin $x = y = 0$ are zero. This is not essential, and again an arbitrary rigid body displacement might be added to the displacement field described by (3.44) and (3.45), without affecting the stresses.

The expressions for the displacements and the stresses can perhaps be expressed more conveniently using bipolar coordinates about the two singular points, see figure 3.6. This gives

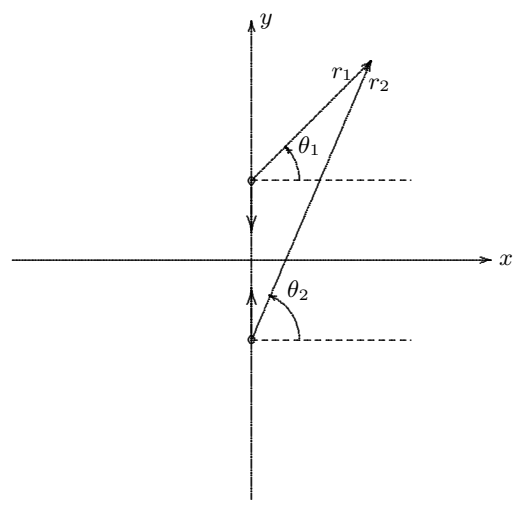

Figure 3.6. Bipolar coordinates

$$\sigma_{xx} = \frac{P}{4\pi(1-\nu)}\Big\{(1+2\nu)\big[\frac{\sin\theta_1}{r_1} - \frac{\sin\theta_2}{r_2}\big] - \frac{2\sin^3\theta_1}{r_1} + \frac{2\sin^3\theta_2}{r_2}\Big\}, \tag{3.46}$$

$$\sigma_{yy} = \frac{P}{4\pi(1-\nu)}\Big\{(1-2\nu)\big[\frac{\sin\theta_1}{r_1} - \frac{\sin\theta_2}{r_2}\big] + \frac{2\sin^3\theta_1}{r_1} - \frac{2\sin^3\theta_2}{r_2}\Big\}, \tag{3.47}$$

$$\sigma_{xy} = \frac{P}{4\pi(1-\nu)}\Big\{(1-2\nu)\big[\frac{\cos\theta_1}{r_1} - \frac{\cos\theta_2}{r_2}\big] + \frac{2\sin^2\theta_1\cos\theta_1}{r_1} - \frac{2\sin^2\theta_2\cos\theta_2}{r_2}\Big\}, \tag{3.48}$$

$$u_x = -\frac{P}{8\pi\mu(1-\nu)}\big[\sin\theta_1\cos\theta_1 - \sin\theta_2\cos\theta_2\big], \tag{3.49}$$

$$u_y = \frac{P}{8\pi\mu(1-\nu)}\big[(3-4\nu)\log\frac{r_1}{r_2} + \cos^2\theta_1 - \cos^2\theta_2\big]. \tag{3.50}$$

It may be noted that for $y = 0$: $\sigma_{xy} = 0$ and $u_y = 0$. This means that the present solution applies to a concentrated force in a semi-infinite medium if the boundary $y = 0$ is rigid and smooth.

The Melan problem refers to a semi-infinite medium with a free boundary at $y = 0$. In the solution presented above the stresses at the boundary are

$$y = 0 \;:\; \sigma_{xy} = 0, \tag{3.51}$$

$$y = 0 \;:\; \sigma_{yy} = -\frac{P}{2\pi(1-\nu)}\frac{h}{x^2+h^2}\big[(1-2\nu) + \frac{2h^2}{x^2+h^2}\big]. \tag{3.52}$$

The first of these equations is a consequence of the anti-symmetry of the problem. The second expresses that there is a compressive stress at the axis $y = 0$, which is in agreement with physical intuition, taking into account that the loading consists of two opposite forces, both acting towards the axis $y = 0$.

If this solution is considered for the half plane $y < 0$ only, it appears that the condition that the shear stress is zero at the boundary is satisfied, but the condition that the normal stress is zero at the boundary is not satisfied. In order to correct that boundary condition a solution for a half plane with a normal stress distribution opposite to the expression (3.52) must be added. This is considered in the next section.

3.3 The balancing solution

In order to complete the solution a problem for the half plane $y < 0$ is considered, with the boundary conditions

$$y = 0 \ : \ \sigma_{xy} = 0, \tag{3.53}$$

$$y = 0 \ : \ \sigma_{yy} = q(x) = \frac{P}{2\pi(1-\nu)} \frac{h}{x^2 + h^2} \big[(1 - 2\nu) + \frac{2h^2}{x^2 + h^2}\big]. \tag{3.54}$$

This problem can be solved by the complex variable method, or by the Fourier transform method. In this chapter the Fourier transform method (Sneddon, 1951) will be used, see also Appendix A.

3.3.1 Fourier transform solution

The Fourier transform method leads to the solution

$$u_x = \int_0^\infty A\,(1 + m\alpha y) \exp(\alpha y) \sin(\alpha x)\, d\alpha, \tag{3.55}$$

$$u_y = \int_0^\infty A\,(1 + m - m\alpha y) \exp(\alpha y) \cos(\alpha x)\, d\alpha. \tag{3.56}$$

where A is given by

$$A = \frac{1}{m\pi\mu} \frac{1}{\alpha} \int_0^\infty q(x) \cos(\alpha x)\, dx, \tag{3.57}$$

and m is an elastic coefficient, related to Poisson's ratio ν by

$$m = \frac{1}{1 - 2\nu}. \tag{3.58}$$

It follows from equation (3.55) and (3.56) that

$$e = \frac{\partial u_x}{\partial x} + \frac{\partial u_y}{\partial y} = 2 \int_0^\infty A\,\alpha \exp(\alpha y) \cos(\alpha x)\, d\alpha, \tag{3.59}$$

Furthermore

$$f = \frac{\partial u_x}{\partial x} - \frac{\partial u_y}{\partial y} = 2my \int_0^\infty A\,\alpha^2 \exp(\alpha y) \cos(\alpha x)\, d\alpha, \tag{3.60}$$

and

$$g = \frac{\partial u_x}{\partial y} + \frac{\partial u_y}{\partial x} = 2my \int_0^\infty A\,\alpha^2 \exp(\alpha y) \sin(\alpha x)\, d\alpha. \tag{3.61}$$

The stresses can be expressed into these three quantities by the following relations

$$\sigma_{xx} = m\mu e + \mu f, \tag{3.62}$$

$$\sigma_{yy} = m\mu e - \mu f, \tag{3.63}$$

$$\sigma_{xy} = \mu g. \tag{3.64}$$

In the present case the function A is, with (3.57) and (3.54), and using standard Fourier integrals as found in Bateman (1954) or in Appendix B,

$$A = \frac{P}{4\pi m\mu(1-\nu)\alpha}\,[2(1-\nu)+\alpha h]\exp(-\alpha h), \tag{3.65}$$

It now follows that

$$m\mu e = -\frac{P}{2\pi(1-\nu)}\big[2(1-\nu)\frac{y_1}{r_1^2} + \frac{h(x^2-y_1^2)}{r_1^4}\big], \tag{3.66}$$

$$\mu f = -\frac{Py}{2\pi(1-\nu)}\big[2(1-\nu)\frac{x^2-y_1^2}{r_1^4} - \frac{2hy_1(3x^2-y_1^2)}{r_1^6}\big], \tag{3.67}$$

$$\mu g = -\frac{Py}{2\pi(1-\nu)}\big[2(1-\nu)\frac{2xy_1}{r_1^4} + \frac{2hx(x^2-3y_1^2)}{r_1^6}\big], \tag{3.68}$$

where, as before,

$$r_1^2 = x^2 + y_1^2 = x^2 + (y-h)^2. \tag{3.69}$$

It must be noted that the value of y is always negative, because the half plane $y < 0$ is considered.

The stresses are found to be

$$\sigma_{xx} = -\frac{P}{\pi}\big[\frac{y_1}{r_1^2} + \frac{y(x^2-y_1^2)}{r_1^4}\big] - \frac{Ph}{2\pi(1-\nu)}\big[\frac{x^2-y_1^2}{r_1^4} - \frac{2yy_1(3x^2-y_1^2)}{r_1^6}\big], \tag{3.70}$$

$$\sigma_{yy} = -\frac{P}{\pi}\big[\frac{y_1}{r_1^2} - \frac{y(x^2-y_1^2)}{r_1^4}\big] - \frac{Ph}{2\pi(1-\nu)}\big[\frac{x^2-y_1^2}{r_1^4} + \frac{2yy_1(3x^2-y_1^2)}{r_1^6}\big], \tag{3.71}$$

$$\sigma_{xy} = -\frac{P}{\pi}\,\frac{2xyy_1}{r_1^4} - \frac{Ph}{2\pi(1-\nu)}\,\frac{2xy(x^2-3y_1^2)}{r_1^6}. \tag{3.72}$$

In order to evaluate the displacements the following integrals are needed

$$J_1 = \int_0^\infty \frac{1}{\alpha}\exp(-\alpha h)\sin(\alpha x)\,d\alpha, \tag{3.73}$$

$$J_2 = \int_0^\infty \frac{1}{\alpha}\exp(-\alpha h)\cos(\alpha x)\,d\alpha. \tag{3.74}$$

These integrals are derived in Appendix B. The result is

$$J_1 = \int_0^\infty \frac{1}{\alpha}\exp(-\alpha h)\sin(\alpha x)\,d\alpha = \arctan(\frac{x}{h}). \tag{3.75}$$

$$J_2 = \int_0^\infty \frac{1}{\alpha}\exp(-\alpha h)\cos(\alpha x)\,d\alpha = -\log\sqrt{x^2+h^2}. \tag{3.76}$$

It should be noted that the integral J_2 is determined up to an arbitrary integration constant. This integration constant remains undetermined, because the singularity in the integral cannot be removed. Here it is assumed that the form (3.76) can be used, except for an arbitrary integration constant. Physically this integration constant can be considered to represent a rigid body displacement.

The expressions for the displacement components now are found to be

$$u_x = -\frac{P(1-2\nu)}{2\pi\mu}\arctan(\frac{x}{y_1}) + \frac{Px(y+h)}{2\pi\mu r_1^2} - \frac{Phx(r_1^2+2yy_1)}{4\pi\mu(1-\nu)r_1^4}, \tag{3.77}$$

$$u_y = -\frac{P(1-\nu)}{\pi\mu}\log r_1 + \frac{Py_1^2}{2\pi\mu r_1^2} + \frac{Phy(x^2-y_1^2)}{4\pi\mu(1-\nu)r_1^4}. \tag{3.78}$$

This completes the third part of the solution.

3.4 Complex variable solution

Now that the solution is known, the complex potentials can be back-calculated from the expressions for the stresses, using the formulas (3.6) and (3.7). This gives

$$\phi(z) = -\frac{iP}{2\pi}\log(z-ih) + \frac{P}{4\pi(1-\nu)}\frac{h}{z-ih}, \tag{3.79}$$

$$\psi(z) = -\frac{iP}{2\pi}\log(z-ih) - \frac{P(1-2\nu)}{4\pi(1-\nu)}\frac{h}{z-ih} + \frac{P}{4\pi(1-\nu)}\frac{hz}{(z-ih)^2}. \tag{3.80}$$

It should be noted that these potentials denote the third solution only. For the full solution of the problem the potentials (3.34) and (3.35) must be added.

The derivatives of the potentials (3.79) and (3.80) are

$$\phi'(z) = -\frac{iP}{2\pi}\frac{1}{z-ih} - \frac{P}{4\pi(1-\nu)}\frac{h}{(z-ih)^2}, \tag{3.81}$$

$$\phi''(z) = \frac{iP}{2\pi}\frac{1}{(z-ih)^2} + \frac{P}{2\pi(1-\nu)}\frac{h}{(z-ih)^3}, \tag{3.82}$$

$$\psi'(z) = -\frac{iP}{2\pi}\frac{z}{(z-ih)^2} - \frac{P}{2\pi(1-\nu)}\frac{hz}{(z-ih)^3}. \tag{3.83}$$

It can easily be verified that the stresses as determined from these expressions using the formulas of Kolosov-Muskhelishvili are in agreement with the expressions (3.70), (3.71) and (3.72) derived above. The expressions (3.77) and (3.78) can be recovered by the formula (3.27), except for a constant factor, which is irrelevant because a rigid body motion can always be added to the displacements.

3.5 Complete solution

The complete solution of the problem of a force of magnitude P, acting in positive y-direction in the half plane $y < 0$ is obtained by addition of the solution for the two opposite forces in an infinite medium, as given by equations (3.34) and (3.35), to the balancing solution given by equations (3.79) and (3.80). This gives

$$\phi(z) = \frac{iP}{8\pi(1-\nu)}\log\frac{z-ih}{z+ih} - \frac{iP}{2\pi}\log(z-ih) + \frac{P}{4\pi(1-\nu)}\frac{h}{z-ih}, \tag{3.84}$$

$$\begin{aligned}\psi(z) = \frac{iP}{8\pi(1-\nu)}\Big[(3-4\nu)\log\frac{z-ih}{z+ih} + \frac{ih}{z-ih} + \frac{ih}{z+ih}\Big] \\ -\frac{iP}{2\pi}\log(z-ih) - \frac{P(1-2\nu)}{4\pi(1-\nu)}\frac{h}{z-ih} + \frac{P}{4\pi(1-\nu)}\frac{hz}{(z-ih)^2}.\end{aligned} \tag{3.85}$$

The value of P here represents the weight of the material excavated from the cavity, i.e. $P = \gamma\pi r^2$.

Differentiation of the expressions (3.84) and (3.85) with respect to z gives

$$\phi'(z) = \frac{iP}{8\pi(1-\nu)}\Big[\frac{1}{z-ih} - \frac{1}{z+ih}\Big] - \frac{iP}{2\pi}\frac{1}{z-ih} - \frac{P}{4\pi(1-\nu)}\frac{h}{(z-ih)^2}, \tag{3.86}$$

$$\phi''(z) = -\frac{iP}{8\pi(1-\nu)}\Big[\frac{1}{(z-ih)^2} - \frac{1}{(z+ih)^2}\Big] + \frac{iP}{2\pi}\frac{1}{(z-ih)^2} + \frac{P}{2\pi(1-\nu)}\frac{h}{(z-ih)^3}, \tag{3.87}$$

$$\begin{aligned}\psi'(z) = \frac{iP}{2\pi}\Big[\frac{1}{z-ih} - \frac{1}{z+ih}\Big] - \frac{iP}{8\pi(1-\nu)}\Big[\frac{z}{(z-ih)^2} - \frac{z}{(z+ih)^2}\Big] \\ -\frac{iP}{2\pi}\frac{z}{(z-ih)^2} - \frac{P}{2\pi(1-\nu)}\frac{hz}{(z-ih)^3}.\end{aligned} \tag{3.88}$$

The integrated surface traction F can be derived from these expressions using eq. (1.16). In the present case the value of this function will be denoted by F_2,

$$F_2 = \phi(z) + z\overline{\phi'(z)} + \overline{\psi(z)} - C. \tag{3.89}$$

The values of the function F_2 must be evaluated for points on the inner boundary, and they must be calculated as functions of θ, the angular coordinate along that boundary in the ζ-plane. For this purpose it is perhaps most convenient to use a number of polar coordinates in the z-plane as well,

$$z = r_0 \exp(i\theta_0), \tag{3.90}$$

$$z - ih = r_1 \exp(i\theta_1), \tag{3.91}$$

$$z + ih = r_2 \exp(i\theta_2). \tag{3.92}$$

Starting from a given constant value of α, and variable values of the angle θ, the coordinates x and y can be calculated from (2.11) and (2.12). The polar coordinates can then be calculated, taking care that continuous values are obtained for the three angles θ_0, θ_1 and θ_2. For definiteness it is assumed that $\theta = 0$, $\theta_1 = 0$ and $\theta_2 = 0$ for a point located far away on the positive x-axis, see also figure 3.7.

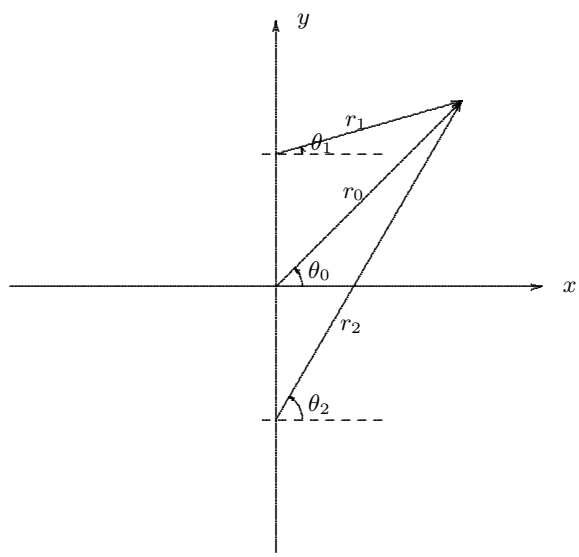

Figure 3.7. Tripolar coordinates

The three terms that together constitute the right hand part of eq. (3.89) can be written as

$$\phi(z) = \frac{P}{8\pi(1-\nu)}[(\theta_2 - \theta_1) + i\log\frac{r_1}{r_2}] + \frac{P}{2\pi}[\theta_1 - i\log r_1] + \frac{P}{4\pi(1-\nu)}\frac{h}{r_1}\exp(-i\theta_1), \tag{3.93}$$

$$\begin{aligned} z\overline{\phi'(z)} = &-\frac{iP}{8\pi(1-\nu)}\Big\{\frac{r_0}{r_1}\exp[i(\theta_0+\theta_1)] - \frac{r_0}{r_2}\exp[i(\theta_0+\theta_2)]\Big\} \\ &+\frac{iP}{2\pi}\frac{r_0}{r_1}\exp[i(\theta_0+\theta_1)] - \frac{P}{4\pi(1-\nu)}\frac{hr_0}{r_1^2}\exp[i(\theta_0+2\theta_1)], \end{aligned} \tag{3.94}$$

$$\begin{aligned} \overline{\psi(z)} = &\frac{P}{8\pi(1-\nu)}(3-4\nu)[(\theta_2-\theta_1) - i\log\frac{r_1}{r_2}] + \frac{P}{2\pi}[\theta_1 + i\log r_1] \\ &-\frac{P}{8\pi(1-\nu)}\big[\frac{h}{r_1}\exp(i\theta_1) + \frac{h}{r_2}\exp(i\theta_2)\big] \\ &-\frac{P(1-2\nu)}{4\pi(1-\nu)}\frac{h}{r_1}\exp(i\theta_1) + \frac{P}{4\pi(1-\nu)}\frac{hr_0}{r_1^2}\exp[i(2\theta_1-\theta_0)]. \end{aligned} \tag{3.95}$$

The boundary function F_2 is the sum of these three terms, except for the integration constant C. It can be written as

$$\begin{aligned}\frac{F_2+C}{\gamma\pi r^2} &= \frac{1}{2\pi}(\theta_1+\theta_2) - \frac{i}{4\pi}\frac{1-2\nu}{1-\nu}\log(\frac{r_1}{r_2}) + \frac{1}{4\pi(1-\nu)}\frac{h}{r_1}\exp(-i\theta_1) \\ &\quad -\frac{i}{8\pi(1-\nu)}\Big\{\frac{r_0}{r_1}\exp[i(\theta_0+\theta_1)] - \frac{r_0}{r_2}\exp[i(\theta_0+\theta_2)]\Big\} + \frac{i}{2\pi}\frac{r_0}{r_1}\exp[i(\theta_0+\theta_1)] \\ &\quad -\frac{1}{4\pi(1-\nu)}\frac{h}{r_1}\frac{r_0}{r_1}\exp[i(\theta_0+2\theta_1)] - \frac{1}{8\pi(1-\nu)}\Big\{\frac{h}{r_1}\exp(i\theta_1) + \frac{h}{r_2}\exp(i\theta_2)\Big\} \\ &\quad -\frac{1}{4\pi}\frac{1-2\nu}{1-\nu}\frac{h}{r_1}\exp(i\theta_1) + \frac{1}{4\pi(1-\nu)}\frac{h}{r_1}\frac{r_0}{r_1}\exp[-i(\theta_0-2\theta_1)]. \qquad (3.96)\end{aligned}$$

The only non-periodic term in this expression is the term θ_2, which varies from $-\pi/2$ to $3\pi/2$ when θ goes from 0 to 2π. The coefficient of this term is $1/2\pi$. This factor will thus precisely cancel the resultant effect of the factor $-\beta/2\pi$ in the first part of the solution, see (2.15). It may be concluded that it can be expected that the integrated surface tractions, when adding the first and second partial solutions, are periodic in θ, with a period 2π. This will not only facilitate the application of Fourier analysis, but it is an essential condition for the possible success of the complex variable method for deriving the third part of the solution. It is now certain that this third partial solution has to balance only the variations in the surface tractions at the cavity boundary, without the need for a resultant force.

The integration constant C may be determined by requiring, arbitrarily, that for $\theta = 0 \ : \ F_2 = 0$. The stresses and displacements are not affected by this constant.

4. Third partial solution

In order to balance the stresses at the boundary of the cavity a third solution must be added, which annuls the stresses generated at the boundary of the cavity by the first two solutions. This third solution is derived in this chapter.

The solution is obtained using a conformal mapping of the region in the z-plane onto a circular ring in the ζ-plane, see figure 4.1. The upper boundary in the half plane must be free of stress, and the stresses

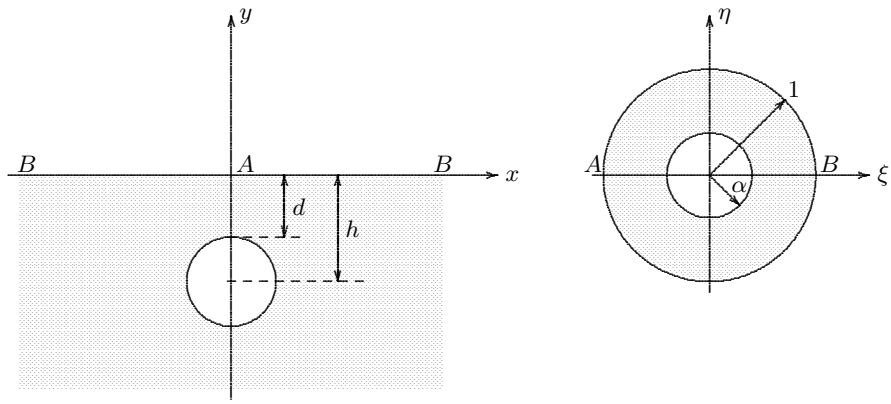

Figure 4.1. Conformal transformation

along the boundary of the circular cavity are prescribed.

The conformal transformation is

$$z = \omega(\zeta) = -ih\frac{1-\alpha^2}{1+\alpha^2}\,\frac{1+\zeta}{1-\zeta}, \tag{4.1}$$

where α is the radius of the inner circle in the ζ-plane, the radius of the outer circle being 1.

The radius r of the circle in the z-plane is

$$r = h\frac{2\alpha}{1+\alpha^2}. \tag{4.2}$$

If the covering depth of the circular cavity in the z-plane is denoted by d, see figure 4.1, it follows that

$$d = h\frac{(1-\alpha)^2}{1+\alpha^2}. \tag{4.3}$$

If $\alpha \to 0$ the radius of the circular cavity is practically zero, which indicates a very deep tunnel, or a very large covering depth. If $\alpha \to 1$ the covering depth is very small. For every value of d/h the corresponding value of α can be determined from (4.3).

The origin in the z-plane is mapped onto $\zeta = -1$, and the point at infinity in the z-plane is mapped onto $\zeta = 1$, see figure 4.1.

The solution of any elastic problem can be described by two functions, $\phi(z)$ and $\psi(z)$, which must be analytic in the region occupied by the material, that is the part of the half plane $y < 0$ outside the circular cavity. If the stress distributions along all boundaries are equilibrium states, which they are in this case, the functions $\phi(z)$ and $\psi(z)$ are analytic and bounded up to and including the boundaries. Through the conformal transformation (4.1) the functions are transformed into functions of ζ, to be denoted by $\phi(\zeta)$ and $\psi(\zeta)$. These functions must be analytic inside the circular ring $\alpha < |\zeta| < 1$ in the ζ-plane, see figure 4.1. This means that they can be represented by their Laurent series expansions,

$$\phi(\zeta) = a_0 + \sum_{k=1}^{\infty} a_k\zeta^k + \sum_{k=1}^{\infty} b_k\zeta^{-k}, \tag{4.4}$$

$$\psi(\zeta) = c_0 + \sum_{k=1}^{\infty} c_k\zeta^k + \sum_{k=1}^{\infty} d_k\zeta^{-k}, \tag{4.5}$$

These series expansions will converge up to the boundaries $|\zeta| = 1$ and $|\zeta| = \alpha$. The coefficients a_k, b_k, c_k and d_k must be determined from the boundary conditions. It may be noted that there are no coefficients b_0 and d_0. This will sometimes be interpreted as $b_0 = 0$ and $d_0 = 0$.

By considering the problem as a superosition of three parts, where the first partial solution represents the stresses at infinity, and the second one accounts for the total force on the half plane (which implies a logarithmic singularity in the stress functions and the displacements, but vanishing stresses at infinity), it has been assured that the third partial solution only has to account for a system of variable stresses at the boundary of the cavity, but these stresses together form an equilibrium system, for which the stresses and displacements at infinity vanish, and thus the stress functions $\phi(z)$ and $\psi(z)$ can be assumed to vanish at infinity too. This will later appear to be an essential condition for this third part of the solution, thus confirming the importance of separating the problem into three parts.

A constant rigid body displacement, which is represented by constant values for the stress functions, may be added later, if desired to annul the displacements at a particular point. This means that it can be assumed that the series expansions (4.4) and (4.5) converge also on the boundaries $|\zeta = 1|$ and $|\zeta = \alpha|$. It may be noted that this assumption also excludes a stress free rigid body rotation of the half plane, which is represented by the stress functions $\psi = 0, \phi = iz$. Such a solution might be included in the solution by adding a term $(1+\zeta)/(1-\zeta)$ to the function $\phi(\zeta)$ in equation (4.4), and taking it along as a separate term in all subsequent derivations. It is more convenient, however, to omit this term, under the assumption that a rigid body rotation may be added later, if desired.

In general the boundary condition for a given surface traction can be expressed in terms of the integrated surface traction

$$F_3(\zeta_0) = i \int_{\zeta_1}^{\zeta_0} (t_x + it_y)\, ds, \tag{4.6}$$

where t_x and t_y are the given surface tractions, ζ_1 is an arbitrary starting point on the boundary considered, and ζ_0 is a variable point on that boundary. The subscript 3 has been added to indicate that the problem considered is actually the third part of the total solution. In general the boundary condition is

$$F_3(\zeta_0) + C = \phi(\zeta_0) + \frac{\omega(\zeta_0)}{\overline{\omega'(\zeta_0)}}\,\overline{\phi'(\zeta_0)} + \overline{\psi(\zeta_0)}, \tag{4.7}$$

where ζ_0 is a point on the boundary, and C is an integration constant, which in general will depend upon the starting point ζ_1. Without loss of generality the constant C can be assumed to be zero along one of the boundaries (Sokolnikoff, 1956). This will be done for the outer boundary. On the inner boundary the integration constant has to be considered as an unknown parameter.

Differentiation of the mapping function (4.1) with respect to ζ gives

$$\omega'(\zeta) = -\frac{2ia}{(1-\zeta)^2}. \tag{4.8}$$

On a circle in the ζ-plane we have $\zeta = \zeta_0 = \rho\sigma$, where $\sigma = \exp(i\theta)$. Then $\overline{\zeta_0} = \rho\sigma^{-1}$. This gives

$$\frac{\omega(\zeta_0)}{\overline{\omega'(\zeta_0)}} = -\tfrac{1}{2}\,\frac{(1+\rho\sigma)(\sigma-\rho)^2}{\sigma^2(1-\rho\sigma)}. \tag{4.9}$$

4.1 Outer boundary

On the outer boundary the radius $\rho = 1$. Then $\zeta_0 = \sigma = \exp(i\theta)$. The expression (4.9) now is

$$\frac{\omega(\zeta_0)}{\overline{\omega'(\zeta_0)}} = \tfrac{1}{2}(1-\sigma^{-2}). \tag{4.10}$$

On this boundary the value of the integrated surface traction function $F_3(\zeta_0) = 0$. It is furthermore assumed that on this boundary the value of the integration constant $C = 0$, which may be done for one boundary without loss of generality (Sokolnikoff, 1956).

Substitution of (4.10) into the general boundary condition (4.7) now gives, using the expressions (4.4) and (4.5) for the stress functions,

$$\sum_{k=1}^{\infty} a_k\sigma^k + \sum_{k=1}^{\infty} b_k\sigma^{-k} + \tfrac{1}{2}\sum_{k=1}^{\infty}(k+1)\overline{a_{k+1}}\sigma^{-k} - \tfrac{1}{2}\sum_{k=2}^{\infty}(k-1)\overline{b_{k-1}}\sigma^{k}$$
$$-\tfrac{1}{2}\sum_{k=2}^{\infty}(k-1)\overline{a_{k-1}}\sigma^{-k} + \tfrac{1}{2}\sum_{k=1}^{\infty}(k+1)\overline{b_{k+1}}\sigma^{k} + a_0 + \tfrac{1}{2}\overline{a_1} + \tfrac{1}{2}\overline{b_1}$$
$$+\overline{c_0} + \sum_{k=1}^{\infty}\overline{c_k}\sigma^{-k} + \sum_{k=1}^{\infty}\overline{d_k}\sigma^{k} = 0. \tag{4.11}$$

This is a power series, the sum of which must be zero. That will be the case for all possible values of σ if (and only if) the coefficients of all powers are zero. This leads to a set of equations from which the coefficients c_k and d_k can be solved. The result is

$$c_0 = -\overline{a_0} - \tfrac{1}{2}a_1 - \tfrac{1}{2}b_1, \tag{4.12}$$

$$c_k = -\overline{b_k} + \tfrac{1}{2}(k-1)a_{k-1} - \tfrac{1}{2}(k+1)a_{k+1}, \qquad k = 1, 2, 3, \ldots, \tag{4.13}$$

$$d_k = -\overline{a_k} + \tfrac{1}{2}(k-1)b_{k-1} - \tfrac{1}{2}(k+1)b_{k+1}, \qquad k = 1, 2, 3, \ldots, \tag{4.14}$$

One half of the unknown coefficients have now been expressed into the other half. It may be noted that for $k = 1$ the last two expressions each contain a non-existing term, but with a factor 0. If the coefficients a_k and b_k can be found, the determination of c_k and d_k is explicit and straightforward.

4.2 Inner boundary

On the inner boundary the radius $\rho = \alpha$, and $\zeta_0 = \alpha\sigma$. Equation (4.9) now gives

$$\frac{\omega(\zeta_0)}{\overline{\omega'(\zeta_0)}} = \frac{-\alpha\sigma - (1-2\alpha^2) + \alpha(2-\alpha^2)\sigma^{-1} - \alpha^2\sigma^{-2}}{2(1-\alpha\sigma)}. \tag{4.15}$$

In contrast with the case of the boundary condition at the outer boundary, where the factor representing the conformal transformation was very simple, see (4.10), this factor appears to be a rather complicated expression at the inner boundary, especially because of the appearance of the factor $(1-\alpha\sigma)$ in the denominator of (4.15). In order to eliminate this difficulty, all the terms in the boundary condition are multiplied by this factor. It may be noted that this factor is never equal to zero inside the ring in the ζ-plane, because $\alpha < 1$.

The boundary condition (4.7) is now written as

$$F^*(\zeta_0) + C(1-\zeta_0) = (1-\zeta_0)\Big[\phi(\zeta_0) + \frac{\omega(\zeta_0)}{\overline{\omega'(\zeta_0)}}\,\overline{\phi'(\zeta_0)} + \overline{\psi(\zeta_0)}\Big], \tag{4.16}$$

where

$$F_3^*(\zeta_0) = (1-\zeta_0)F_3(\zeta_0), \tag{4.17}$$

and $\zeta_0 = \alpha\sigma$.

The advantage of writing the boundary condition in the form (4.16 is that now the singularity in the second term of the right hand side has been removed. All the terms can be expressed as a series of powers of σ.

It is assumed that in the boundary condition (4.7) the function $F(\zeta_0)$ can be written as

$$F_3(\zeta_0) = F_3(\alpha\sigma) = \sum_{k=-\infty}^{\infty} B_k\sigma^k, \tag{4.18}$$

where the coefficients B_k are given, or can be determined, for instance by Fourier analysis. The modified boundary function $F_3^*(\zeta_0)$ is written as

$$F_3^*(\zeta_0) = F_3^*(\alpha\sigma) = \sum_{k=-\infty}^{\infty} A_k \sigma^k, \tag{4.19}$$

The coefficients A_k can easily be calculated from the coefficients B_k, using the definition (4.17). The result is

$$A_k = B_k - \alpha B_{k-1}, \qquad k = -\infty, \ldots, \infty. \tag{4.20}$$

Thus the coefficients A_k can also be considered as known.

Substitution of the expressions for the stress functions and the boundary function (4.19) into the modified boundary condition (4.16) again leads to an equation in the form of a power series, with negative and positive powers σ^k. The coefficients c_k and d_k can be eliminated from this series using the equations (4.12) – (4.14). If the equation is written such that the sum of the power series is zero, it follows that the coefficients of all powers of σ must be zero. After some tedious but elementary algebra this leads to the following set of recurrent equations

$$\begin{aligned}(1-\alpha^{2k+2})a_{k+1} + (1-\alpha^2)(k+1)\overline{b_{k+1}} = \\ = \alpha^2(1-\alpha^{2k})a_k + (1-\alpha^2)k\overline{b_k} - A_{k+1}\alpha^{k+1}, \quad k = 1, 2, 3, \ldots,\end{aligned} \tag{4.21}$$

and

$$\begin{aligned}(1-\alpha^2)\alpha^{2k}(k+1)a_{k+1} + (1-\alpha^{2k+2})\overline{b_{k+1}} = \\ = (1-\alpha^2)\alpha^{2k}ka_k + (1-\alpha^{2k})\overline{b_k} - \overline{A_{-k}}\alpha^k, \quad k = 1, 2, 3, \ldots.\end{aligned} \tag{4.22}$$

From these equations the coefficients a_{k+1} and b_{k+1} can be determined, if a_k and b_k are known. This requires the solution of a system of two equations with two unknowns. The solution can be given explicitly, of course, but it may well be more convenient to solve the system numerically.

It may be noted that the homogeneous system (obtained when $A_k = A_{-k} = 0$) admits a solution

$$A_k = A_{-k} = 0 \ : \ a_{k+1} = -\overline{b_{k+1}} = a_k = -\overline{b_k}. \tag{4.23}$$

This property will be used later. The formal solution of the system of equations (4.23) has no physical significance. If all the coefficients in the two series expansions in eqs. (4.4) are equal, the first series converges inside the unit circle, representing the function $1/(1-\zeta)$ in that region, and the second series converges outside the unit circle, representing the function $1/(1-\zeta)$ in its own region of convergence. The sum of these two series does not have a common region of convergence, however, and therefore is a meaningless solution.

Equations for the starting coefficients a_1 and a_2 can be obtained from the conditions that the coefficients of σ^0 and σ^1 must be zero. This gives

$$(1-\alpha^2)(a_1 + \overline{b_1}) + \overline{C} = -\overline{A_0}, \tag{4.24}$$

$$(1-\alpha^2)(a_1 + \overline{b_1}) - C\alpha^2 = -A_1\alpha, \tag{4.25}$$

It follows from (4.24) and (4.25) that

$$\overline{C} + C\alpha^2 = -\overline{A_0} + A_1\alpha, \tag{4.26}$$

which determines the integration constant C.

All the coefficients can now be determined successively, except for the constants a_0 and $(\overline{a_1} + b_1)$. The constant a_0 represents an arbitrary rigid body displacement, which produces no stresses in the material. It can be left undetermined, or it can be chosen so that a certain given point is fixed. Of the constants a_1 and b_1 only the combination $(a_1 + \overline{b_1})$ is determined by the conditions (4.24) and (4.25). Its complex conjugate $(\overline{a_1} + b_1)$ remains undetermined by the equations given above. This difficulty can be removed by noting that the convergence of the series expressions (4.4) and (4.5) for the stress functions ϕ and ψ, for all values of ζ in the ring $\alpha \leq |\zeta| \leq 1$, and in particular for $\zeta = 1$, requires that all coefficients tend

towards zero if $k \to \infty$. Because the system of recurrent equations (4.21) and (4.22) is linear, and because the homogeneous system of equations admits the solution (4.23), in which all coefficients a_k and $-\overline{b_k}$ are equal, it follows that an arbitrary constant can be added to each of these coefficients without affecting its solution. This means that the first constant, say a_1, can be determined by first assuming this constant to be zero, then calculating b_1 from (4.24), and all further coefficients from a repeated application of (4.21) and (4.22). It can be expected (and has been verified by performing the actual calculations) that for very large values of k, say $k = 1000$, a constant limiting value, other than zero, is obtained for the coefficients a_k. The correct value of the coefficients can then be found by subtracting that limiting value from all coefficients a_k and $-\overline{b_k}$. The remaining coefficients c_k and d_k can finally be determined from the equations (4.12) – (4.14). This completes the solution.

It may be noted that the assumption that the coefficients tend towards zero for $k \to \infty$ implies that a singularity of the form $1/(1-\zeta)$ has been excluded. Inside the unit circle $|\zeta| = 1$ this function can be approximated by the power series

$$1/(1-\zeta) = 1 + \zeta + \zeta^2 + \zeta^3 + \ldots, \tag{4.27}$$

which converges inside the circle, but not on it. Actually, this is the singularity in the conformal transformation function (4.1), corresponding to a stress function $\phi = cz$. It can be shown that a stress function $\phi = cz$ denotes a constant stress solution (for real values of c) and a rigid body rotation (for imaginary values of c). The constant stress solution violates the conditions at infinity, and the rigid body rotation has been excluded specifically. By the inclusion of Melan's solution as the second part of the solution it can be expected that a singularity of the form $\phi(\zeta) = \log(1-\zeta)$ has also been excluded, so that the coefficients a_k should go to zero faster than the coefficients of the series $1 + \zeta + \frac{1}{2}\zeta^2 + \frac{1}{3}\zeta^3 + \frac{1}{4}\zeta^4 \ldots$. By eliminating this singularity from the solution the derivative of $\phi(\zeta)$ should also converge for $|\zeta| = 1$.

5. Fourier series solution

The boundary condition function F for the third part of the solution has been denoted as F_3, and the requirement is that the boundary of the cavity is free of surface tractions,

$$F_1 + F_2 + F_3 = 0. \tag{5.1}$$

or

$$F_3 = -F_1 - F_2, \tag{5.2}$$

where the functions F_1 and F_2 have been given above, see (2.15) and (3.96). After some elementary algebra the real and imaginary parts of F_3 are found to be

$$\begin{aligned}\frac{\mathrm{Re}(F_3)}{\gamma\pi r^2} &= \frac{\pi - 2\theta_1}{4\pi} + \frac{1}{4\pi}\sin 2\beta + \frac{1}{\pi}\frac{h}{r}\sin\beta + \frac{1-4\nu}{8\pi(1-\nu)}\frac{h}{r_1}\cos\theta_1 + \frac{1}{8\pi(1-\nu)}\frac{h}{r_2}\cos\theta_2 \\ &+ \frac{3-4\nu}{8\pi(1-\nu)}\frac{r_0}{r_1}\sin(\theta_0+\theta_1) + \frac{1}{8\pi(1-\nu)}\frac{r_0}{r_2}\sin(\theta_0+\theta_2) - \frac{1}{2\pi(1-\nu)}\frac{h}{r_1}\frac{r_0}{r_1}\sin\theta_0\sin 2\theta_1,\end{aligned} \tag{5.3}$$

$$\begin{aligned}\frac{\mathrm{Im}(F_3)}{\gamma\pi r^2} &= \frac{K_0}{\pi}\frac{h}{r}(1-\cos\beta) + \frac{k}{4\pi}(1-\cos 2\beta) + \frac{1}{4\pi}\frac{1-2\nu}{1-\nu}\log\left(\frac{r_1}{r_2}\right) + \frac{5-4\nu}{8\pi(1-\nu)}\frac{h}{r_1}\sin\theta_1 \\ &+ \frac{1}{8\pi(1-\nu)}\frac{h}{r_2}\sin\theta_2 - \frac{3-4\nu}{8\pi(1-\nu)}\frac{r_0}{r_1}\cos(\theta_0+\theta_1) - \frac{1}{8\pi(1-\nu)}\frac{r_0}{r_2}\cos(\theta_0+\theta_2) \\ &+ \frac{1}{2\pi(1-\nu)}\frac{h}{r_1}\frac{r_0}{r_1}\sin\theta_0\cos 2\theta_1.\end{aligned} \tag{5.4}$$

In these equations the parameters r_0, r_1, r_2, θ_0, θ_1 and θ_2 are tripolar coordinates, as defined in the previous chapter, see figure 3.7. The angle β has been defined in chapter 2, see (2.18).

The boundary conditions for the third partial solution are defined by the values of the boundary function F_3 as a function of the tangential coordinate θ. In the solution procedure this function must be approximated by a Fourier series expansion. Because the boundary function F_3 is periodic, and its values are bounded, it can be expected that convergence of the Fourier series will be good or even excellent. This will be investigated next.

5.1 Fourier series approximation

In general the complex Fourier series is written as

$$F_3(x) = \sum_{k=-\infty}^{\infty} B_k \exp(ikx), \tag{5.5}$$

where $f(x)$ is a complex function of the real variable x, and the coefficients B_k are also complex. These coefficients are determined by the integrals

$$B_k = \frac{1}{2\pi}\int_0^{2\pi} F_3(x)\exp(-ikx)\,dx. \tag{5.6}$$

The integrals can be calculated numerically using a method originally developed by Filon (1928), see Appendix C.

As an example the results for the case $\alpha = 0.5$ (i.e. $r/h = 0.8$), $\nu = 0$ and $K_0 = 0.5$, will be presented graphically. The results for the real part, $\mathrm{Re}\,(F3)$, are shown in figure 5.1, and those for the imaginary part, $\mathrm{Im}\,(F3)$, are shown in figure 5.2. A constant factor has been added to both the real and imaginary parts of the function, in order to make them zero for $\theta = 0$.

The fully drawn lines in the two figures give the analytical values, the dotted lines give the Fourier series approximation, using 5 terms only. It appears that even with such a small number of terms the approximation is reasonably good. For 10 terms or more the approximation can not be distinguished

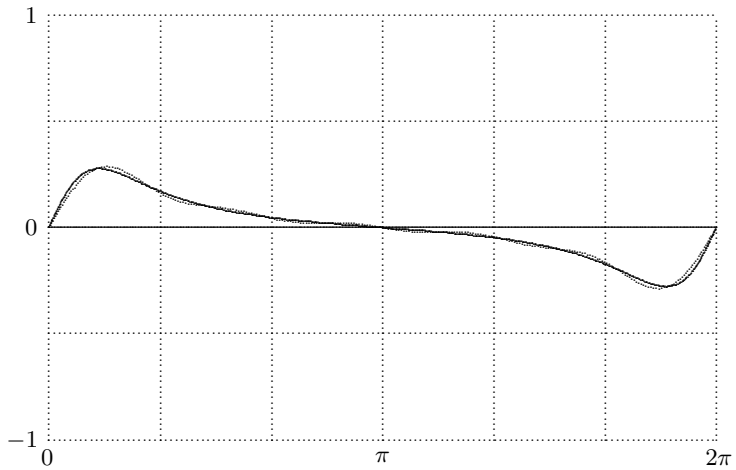

Figure 5.1. Fourier series approximation, real part

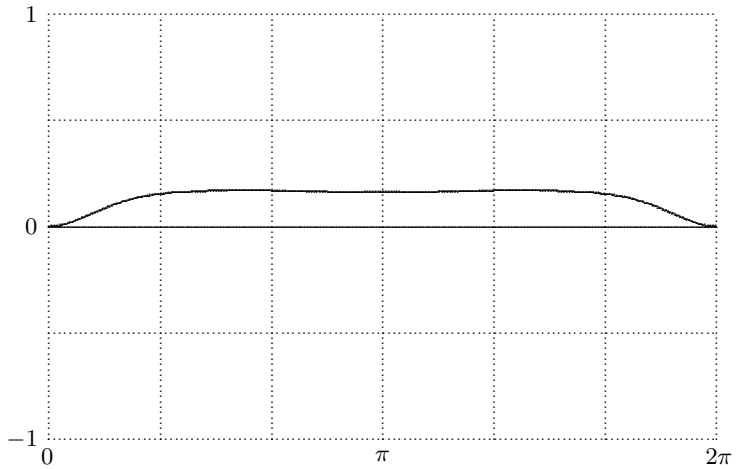

Figure 5.2. Fourier series approximation, imaginary part

from the analytical results. The vertical scale in the figures is such that one unit corresponds to $\gamma\pi r^2$, the weight of the material in the cavity.

The coefficients of the Fourier series expansion are calculated in the program FOURIER. In this program the user must specify the values of α, ν, K_0, and the number of terms to be used in the Fourier series analysis. The program will show the results on the screen, and it also produces some graphics files.

It appears from experience with the program FOURIER that the convergence of the Fourier series is excellent for reasonably small values of α, indicating relatively small cavities. For large values of α, corresponding to large cavities, say with $r/h = 0.99$, a large number of terms (up to 50 or 100) may be needed in the Fourier series expansion. Such large cavities are not usually constructed, but the analysis is still applicable, and convergence of the Fourier series is assured.

It appears from inspection of the Fourier coefficients that all of them are purely imaginary, see table 5.1. This must be a consequence of the symmetry of the problem with respect to the vertical axis. It suggests

k	$\mathrm{Re}(B_k)$	$\mathrm{Im}(B_k)$	$\mathrm{Re}(B_{-k})$	$\mathrm{Im}(B_{-k})$
0	0.000000	-0.518465	0.000000	0.000000
1	0.000000	0.021635	0.000000	0.164873
2	0.000000	0.006621	0.000000	0.117124
3	0.000000	0.005933	0.000000	0.076359
4	0.000000	0.005065	0.000000	0.046871
5	0.000000	0.003734	0.000000	0.027712
6	0.000000	0.002503	0.000000	0.015977
7	0.000000	0.001579	0.000000	0.009044
8	0.000000	0.000956	0.000000	0.005049
9	0.000000	0.000562	0.000000	0.002787
10	0.000000	0.000323	0.000000	0.001525

Table 5.1. 20 Coefficients

that the coefficients of the stress functions are all also purely imaginary, which simplifies the analysis. Of course, strictly speaking, this can only be an assumption in this stage, which will have to be verified later, by checking the actual boundary conditions in terms of the stresses.

6. Analytical series expansion

In the previous chapters the Fourier series expansion of the boundary functions $F(\sigma)$ has been performed by numerical evaluation of the Fourier integrals. It is of course more accurate, and probably much faster, if a direct expansion in a Laurent type series can be obtained. Such an expansion will be derived in this chapter.

Starting points are the basic expressions for the boundary functions for the first and second solution given in previous chapters.

6.1 The gravity solution

For the first part of the solution, the solution for the undisturbed half plane loaded by gravity, the boundary function is given by equation (2.15),

$$\frac{F_1}{P} = -\frac{\beta}{2\pi} - \frac{\sin 2\beta}{4\pi} - \frac{1}{\pi}\frac{h}{r}\sin\beta - \frac{iK_0}{\pi}\big[\frac{h}{r}(1-\cos\beta) + \tfrac{1}{4}(1-\cos 2\beta)\big], \tag{6.1}$$

where $P = \gamma\pi r^2$, the weight of the material inside the cavity (a circle of radius r), and where β denotes the angle with the vertical, along the cavity boundary, see figure 6.1. The center of the cavity is located

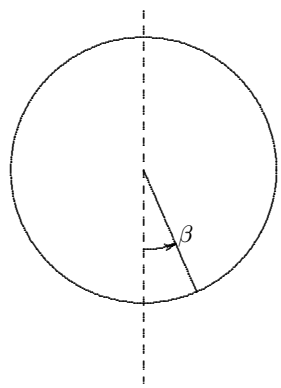

Figure 6.1. Circular cavity

at the point $x = 0, y = -h$. It will be attempted to expand the expression (6.1) into a Laurent series,

$$F_1(\sigma) = \sum_{k=-\infty}^{\infty} B_k^1 \sigma^k. \tag{6.2}$$

6.1.1 Gravity : first term

On the boundary of the cavity $x = r\sin\beta$ and $y = -h - r\cos\beta$, so that

$$z + ih = -ir\exp(i\beta). \tag{6.3}$$

The conformal mapping is, from (4.1),

$$z = \omega(\zeta) = -ih\frac{1-\alpha^2}{1+\alpha^2}\,\frac{1+\zeta}{1-\zeta}, \tag{6.4}$$

where α is the radius of the inner circle in the ζ-plane, the radius of the outer circle being 1. The radius r of the circle in the z-plane is

$$r = h\frac{2\alpha}{1+\alpha^2}. \tag{6.5}$$

It follows from (6.4) that

$$z + ih = -\frac{2ih}{1+\alpha^2}\,\frac{\zeta - \alpha^2}{1-\zeta}. \tag{6.6}$$

On the boundary of the cavity $\zeta = \alpha\sigma = \alpha\exp(i\theta)$, so that

$$z + ih = -\frac{2ih\alpha}{1+\alpha^2}\,\frac{\sigma - \alpha}{1-\alpha\sigma}. \tag{6.7}$$

With (6.5) it follows that

$$z + ih = -ir\sigma\,\frac{1-\alpha/\sigma}{1-\alpha\sigma} = -ir\exp(i\theta)\,\frac{1-\alpha/\sigma}{1-\alpha\sigma}. \tag{6.8}$$

Comparison with (6.3) shows that

$$\exp(i\beta) = \exp(i\theta)\,\frac{1-\alpha/\sigma}{1-\alpha\sigma}. \tag{6.9}$$

Taking logarithms gives

$$\beta = \theta + i\log(1-\alpha\sigma) - i\log(1-\alpha/\sigma). \tag{6.10}$$

The following standard function and its expansion will be used

$$T_0(\zeta) = \log(1-\zeta) = -\sum_{k=1}^{\infty}\frac{\zeta^k}{k}. \tag{6.11}$$

Using this notation equation (6.10) can be written as

$$\beta = \theta + iT_0(\alpha\sigma) - iT_0(\alpha/\sigma). \tag{6.12}$$

Apart form the first term the function β has now indeed be expressed into a Laurent series. It is expected that the first term, which is essentially non-periodic in θ, will cancel versus a similar term in the second solution. Actually, this second solution has been introduced for that purpose.

It may be noted that

$$\begin{aligned} T_0(\alpha\sigma) - T_0(\alpha/\sigma) = -\big\{&\alpha\exp(i\theta) + \tfrac{1}{2}\alpha^2\exp(2i\theta) + \tfrac{1}{3}\alpha^3\exp(3i\theta) + \ldots \\ &-\alpha\exp(-i\theta) - \tfrac{1}{2}\alpha^2\exp(-2i\theta) - \tfrac{1}{3}\alpha^3\exp(-3i\theta) - \ldots\big\}, \end{aligned} \tag{6.13}$$

or

$$T_0(\alpha\sigma) - T_0(\alpha/\sigma) = -2i\big\{\alpha\sin(\theta) + \tfrac{1}{2}\alpha^2\sin(2\theta) + \tfrac{1}{3}\alpha^3\sin(3\theta) + \ldots\big\}, \tag{6.14}$$

which shows that β is real, as required.

6.1.2 Gravity : other terms

Equation (6.9) can be written as

$$\exp(i\beta) = \sigma\,\frac{1-\alpha/\sigma}{1-\alpha\sigma}. \tag{6.15}$$

Taking complex conjugates gives, using that $\overline{\sigma} = 1/\sigma$,

$$\exp(-i\beta) = \frac{1}{\sigma}\,\frac{1-\alpha\sigma}{1-\alpha/\sigma}. \tag{6.16}$$

It follows that

$$2\cos(\beta) = \sigma\,\frac{1-\alpha/\sigma}{1-\alpha\sigma} + \frac{1}{\sigma}\,\frac{1-\alpha\sigma}{1-\alpha/\sigma}, \tag{6.17}$$

or

$$2\cos(\beta) = -2\alpha + \frac{1-\alpha^2}{\alpha}\,\frac{\alpha\sigma}{1-\alpha\sigma} + \frac{1-\alpha^2}{\alpha}\,\frac{\alpha/\sigma}{1-\alpha/\sigma}. \tag{6.18}$$

Using the notation

$$T_1(\zeta) = \frac{\zeta}{1-\zeta} = \sum_{k=1}^{\infty} \zeta^k, \tag{6.19}$$

this can also be written as

$$\cos(\beta) = -\alpha + \frac{1-\alpha^2}{2\alpha} T_1(\alpha\sigma) + \frac{1-\alpha^2}{2\alpha} T_1(\alpha/\sigma). \tag{6.20}$$

Because $2i\sin\beta = \exp(i\beta) - \exp(-i\beta)$ it follows, using the same expansions, that

$$\sin(\beta) = -i\frac{1-\alpha^2}{2\alpha} T_1(\alpha\sigma) + i\frac{1-\alpha^2}{2\alpha} T_1(\alpha/\sigma). \tag{6.21}$$

In order to expand the functions $\sin 2\beta$ and $\cos 2\beta$ the following notation is introduced,

$$T_2(\zeta) = \frac{\zeta}{(1-\zeta)^2} = \sum_{k=1}^{\infty} k\zeta^k. \tag{6.22}$$

This can be derived from (6.19) by differentiation with respect to ζ.

From (6.15) and (6.16) it follows that

$$2\cos 2\beta = \sigma^2\,\frac{(1-\alpha/\sigma)^2}{(1-\alpha\sigma)^2} + \frac{1}{\sigma^2}\,\frac{(1-\alpha\sigma)^2}{(1-\alpha/\sigma)^2}. \tag{6.23}$$

The first term can be written as

$$\sigma^2\,\frac{(1-\alpha/\sigma)^2}{(1-\alpha\sigma)^2} = \alpha^2 - \frac{1-\alpha^4}{\alpha^2}\,\frac{\alpha\sigma}{1-\alpha\sigma} + \frac{(1-\alpha^2)^2}{\alpha^2}\,\frac{\alpha\sigma}{(1-\alpha\sigma)^2}, \tag{6.24}$$

and the second term can be written as

$$\frac{1}{\sigma^2}\,\frac{(1-\alpha\sigma)^2}{(1-\alpha/\sigma)^2} = \alpha^2 - \frac{1-\alpha^4}{\alpha^2}\,\frac{\alpha/\sigma}{1-\alpha/\sigma} + \frac{(1-\alpha^2)^2}{\alpha^2}\,\frac{\alpha/\sigma}{(1-\alpha/\sigma)^2}. \tag{6.25}$$

Using (6.22) it now follows that

$$\cos 2\beta = \alpha^2 - \frac{1-\alpha^4}{2\alpha^2}\big[T_1(\alpha\sigma) + T_1(\alpha/\sigma)\big] + \frac{(1-\alpha^2)^2}{2\alpha^2}\big[T_2(\alpha\sigma) + T_2(\alpha/\sigma)\big]. \tag{6.26}$$

Because $2i\sin 2\beta = \exp(2i\beta) - \exp(-2i\beta)$ it follows, using the same expansions, that

$$\sin 2\beta = i\frac{1-\alpha^4}{2\alpha^2}\big[T_1(\alpha\sigma) - T_1(\alpha/\sigma)\big] - i\frac{(1-\alpha^2)^2}{2\alpha^2}\big[T_2(\alpha\sigma) - T_2(\alpha/\sigma)\big]. \tag{6.27}$$

Substitution of (6.12), (6.20), (6.21), (6.26) and (6.27) leads to the following expression for F_1,

$$\begin{aligned}\frac{F_1}{iP} = -\frac{\theta}{2\pi i} - \frac{K_0}{4\pi\alpha}(\alpha^3 + 2\alpha^2 + 3\alpha + 2) - \frac{1}{2\pi}\big[T_0(\alpha\sigma) - T_0(\alpha/\sigma)\big] \\ + \frac{1-\alpha^4}{8\pi\alpha^2}\big[(1+K_0)T_1(\alpha\sigma) - (1-K_0)T_1(\alpha/\sigma)\big] \\ + \frac{(1-\alpha^2)^2}{8\pi\alpha^2}\big[(1+K_0)T_2(\alpha\sigma) - (1-K_0)T_2(\alpha/\sigma)\big].\end{aligned} \tag{6.28}$$

This means that the function F_1 has now been expressed as a Laurent series, except for the first term. Thus we may write

$$\frac{F_1(\sigma)}{iP} = -\frac{\theta}{2\pi i} + C_1 + \sum_{k=1}^{\infty} A_k^1 \sigma^k + \sum_{k=1}^{\infty} D_k^1 \sigma^{-k}, \tag{6.29}$$

where now

$$C_1 = -\frac{K_0}{4\pi\alpha}(\alpha^3 + 2\alpha^2 + 3\alpha + 2), \tag{6.30}$$

$$A_k^1 = (\frac{U_1}{k} + V_1 + kW_1)\alpha^k, \tag{6.31}$$

$$D_k^1 = (\frac{U_3}{k} + V_3 + kW_3)\alpha^k, \tag{6.32}$$

where

$$U_1 = \frac{1}{2\pi} \tag{6.33}$$

$$V_1 = \frac{(1+K_0)(1-\alpha^4)}{8\pi\alpha^2}, \tag{6.34}$$

$$W_1 = \frac{(1+K_0)(1-\alpha^2)^2}{8\pi\alpha^2}, \tag{6.35}$$

$$U_3 = -\frac{1}{2\pi} \tag{6.36}$$

$$V_3 = -\frac{(1-K_0)(1-\alpha^4)}{8\pi\alpha^2}, \tag{6.37}$$

$$W_3 = -\frac{(1-K_0)(1-\alpha^2)^2}{8\pi\alpha^2}. \tag{6.38}$$

This completes the expansion of the first partial solution.

6.2 Melan's solution

For the second part of the solution the boundary function is given by equation (3.89). Apart from the integration constant this function is

$$F_2 = \phi(z) + z\overline{\phi'(z)} + \overline{\psi(z)}, \tag{6.39}$$

where

$$\phi(z) = \frac{iP}{8\pi(1-\nu)}\log\frac{z-ih}{z+ih} - \frac{iP}{2\pi}\log\frac{z-ih}{h} + \frac{P}{4\pi(1-\nu)}\frac{h}{z-ih}, \tag{6.40}$$

$$\phi'(z) = \frac{iP}{8\pi(1-\nu)}[\frac{1}{z-ih} - \frac{1}{z+ih}] - \frac{iP}{2\pi}\frac{1}{z-ih} - \frac{P}{4\pi(1-\nu)}\frac{h}{(z-ih)^2}, \tag{6.41}$$

$$\begin{aligned}\psi(z) = \frac{iP}{8\pi(1-\nu)}\big[(3-4\nu)\log\frac{z-ih}{z+ih} + \frac{ih}{z-ih} + \frac{ih}{z+ih}\big] \\ -\frac{iP}{2\pi}\log(z-ih) - \frac{P(1-2\nu)}{4\pi(1-\nu)}\frac{h}{z-ih} + \frac{P}{4\pi(1-\nu)}\frac{hz}{(z-ih)^2}.\end{aligned} \tag{6.42}$$

In equation (6.40) a constant term has been added, in order to make the argument of the second logarithm dimensionless. This term will only add a rigid body translation of the medium, with zero stresses.

The three terms of equation (6.39) will be considered successively.

6.2.1 Melan : first term

The first term of the boundary function for Melan's solution is, from eq. 6.40,

$$\frac{F_2^1}{P} = \frac{i}{8\pi(1-\nu)} \log\frac{z-ih}{z+ih} - \frac{i}{2\pi}\log\frac{z-ih}{h} + \frac{1}{4\pi(1-\nu)}\frac{h}{z-ih}. \tag{6.43}$$

The conformal mapping is, from (6.4),

$$z = -ih\frac{1-\alpha^2}{1+\alpha^2}\,\frac{1+\zeta}{1-\zeta}. \tag{6.44}$$

It follows that

$$z+ih = -\frac{2ih}{1+\alpha^2}\,\zeta\,\frac{1-\alpha^2/\zeta}{1-\zeta}, \tag{6.45}$$

$$z-ih = -\frac{2ih}{1+\alpha^2}\,\frac{1-\alpha^2\zeta}{1-\zeta}. \tag{6.46}$$

Hence

$$\frac{z-ih}{z+ih} = \frac{1}{\zeta}\,\frac{1-\alpha^2\zeta}{1-\alpha^2/\zeta}. \tag{6.47}$$

On the cavity boundary $\zeta = \alpha\sigma$. This gives

$$\frac{z-ih}{z+ih} = \frac{1}{\alpha\sigma}\,\frac{1-\alpha^3\sigma}{1-\alpha/\sigma}. \tag{6.48}$$

Taking the logarithm gives

$$\log\frac{z-ih}{z+ih} = -i\theta - \log\alpha + \log(1-\alpha^3\sigma) - \log(1-\alpha/\sigma). \tag{6.49}$$

Using (6.11) this can be written as

$$\log\frac{z-ih}{z+ih} = -\log\alpha - i\theta + T_0(\alpha^3\sigma) - T_0(\alpha/\sigma). \tag{6.50}$$

The second term of equation (6.43) is of the form

$$\log\frac{z-ih}{h} = \log\frac{-2i}{1+\alpha^2} + \log(1-\alpha^3\sigma) - \log(1-\alpha\sigma), \tag{6.51}$$

or

$$\log\frac{z-ih}{h} = \log\frac{-2i}{1+\alpha^2} + T_0(\alpha^3\sigma) - T_0(\alpha\sigma). \tag{6.52}$$

The third term of equation (6.43) is of the form

$$\frac{h}{z-ih} = i\,\frac{1+\alpha^2}{2}\,\frac{1-\alpha\sigma}{1-\alpha^3\sigma}. \tag{6.53}$$

This can also be written as

$$\frac{h}{z-ih} = i\,\frac{1+\alpha^2}{2} - i\,\frac{1-\alpha^4}{2\alpha^2}\,\frac{\alpha^3\sigma}{1-\alpha^3\sigma}. \tag{6.54}$$

or, with (6.19),

$$\frac{h}{z-ih} = i\,\frac{1+\alpha^2}{2} - i\,\frac{1-\alpha^4}{2\alpha^2}T_1(\alpha^3\sigma). \tag{6.55}$$

Substitution of (6.50), (6.52) and (6.55) into (6.43) gives

$$\begin{aligned}\frac{F_2^1}{P} &= \frac{\theta}{8\pi(1-\nu)} + \frac{i}{8\pi(1-\nu)}(1+\alpha^2-\log\alpha) - \frac{i}{2\pi}\log\frac{-2i}{1+\alpha^2}\\ &\quad -\frac{i}{8\pi(1-\nu)}\left[(3-4\nu)T_0(\alpha^3\sigma) + T_0(\alpha/\sigma)\right] + \frac{i}{2\pi}T_0(\alpha\sigma) - \frac{i}{8\pi(1-\nu)}\,\frac{1-\alpha^4}{\alpha^2}\,T_1(\alpha^3\sigma).\end{aligned} \tag{6.56}$$

This completes the expansion of the first term of the boundary function for Melan's solution.

6.2.2 Melan : second term

The second term of the boundary function for Melan's solution is, from eq. 6.41,

$$\frac{F_2^2}{P} = \frac{z}{h}\,\frac{h\overline{\phi'(z)}}{P}, \tag{6.57}$$

where

$$\frac{z}{h} = -i\,\frac{1-\alpha^2}{1+\alpha^2}\,\frac{1+\zeta}{1-\zeta}, \tag{6.58}$$

and

$$\frac{h\phi'(z)}{P} = \frac{i}{8\pi(1-\nu)}\Big[\frac{h}{z-ih} - \frac{h}{z+ih}\Big] - \frac{i}{2\pi}\,\frac{h}{z-ih} - \frac{1}{4\pi(1-\nu)}\,\frac{h^2}{(z-ih)^2}. \tag{6.59}$$

On the cavity boundary we have

$$\frac{z}{h} = -i\,\frac{1-\alpha^2}{1+\alpha^2}\,\frac{1+\alpha\sigma}{1-\alpha\sigma}. \tag{6.60}$$

Furthermore

$$\frac{ih}{z-ih} = -\frac{1+\alpha^2}{2}\,\frac{1-\alpha\sigma}{1-\alpha^3\sigma}, \tag{6.61}$$

$$\frac{ih}{z+ih} = -\frac{1+\alpha^2}{2}\,\frac{1}{\alpha\sigma}\,\frac{1-\alpha\sigma}{1-\alpha/\sigma}, \tag{6.62}$$

$$\frac{h^2}{(z-ih)^2} = -\frac{(1+\alpha^2)^2}{4}\,\frac{(1-\alpha\sigma)^2}{(1-\alpha^3\sigma)^2}. \tag{6.63}$$

Substitution of these formulas into (6.59) gives

$$\begin{aligned}\frac{h\phi'(z)}{P} = -\frac{1+\alpha^2}{16\pi(1-\nu)}\Big[\frac{1-\alpha\sigma}{1-\alpha^3\sigma} - \frac{1}{\alpha\sigma}\,\frac{1-\alpha\sigma}{1-\alpha/\sigma}\Big]\\ +\frac{1+\alpha^2}{4\pi}\,\frac{1-\alpha\sigma}{1-\alpha^3\sigma} + \frac{(1+\alpha^2)^2}{16\pi(1-\nu)}\,\frac{(1-\alpha\sigma)^2}{(1-\alpha^3\sigma)^2}.\end{aligned} \tag{6.64}$$

The complex conjugate of this expression is, with $\overline{\sigma} = 1/\sigma$,

$$\begin{aligned}\frac{h\overline{\phi'(z)}}{P} = -\frac{1+\alpha^2}{16\pi(1-\nu)}\Big[\frac{1-\alpha/\sigma}{1-\alpha^3/\sigma} - \frac{\sigma}{\alpha}\,\frac{1-\alpha/\sigma}{1-\alpha\sigma}\Big]\\ +\frac{1+\alpha^2}{4\pi}\,\frac{1-\alpha/\sigma}{1-\alpha^3/\sigma} + \frac{(1+\alpha^2)^2}{16\pi(1-\nu)}\,\frac{(1-\alpha/\sigma)^2}{(1-\alpha^3/\sigma)^2}.\end{aligned} \tag{6.65}$$

This function must be multiplied by z/h, as given by (6.60). This gives

$$\begin{aligned}\frac{F_2^2}{P} = \frac{i(1-\alpha^2)}{16\pi(1-\nu)}\,\frac{1+\alpha\sigma}{1-\alpha\sigma}\Big[\frac{1-\alpha/\sigma}{1-\alpha^3/\sigma} - \frac{\sigma}{\alpha}\,\frac{1-\alpha/\sigma}{1-\alpha\sigma}\\ -(1+\alpha^2)\frac{(1-\alpha/\sigma)^2}{(1-\alpha^3/\sigma)^2}\Big] - \frac{i(1-\alpha^2)}{4\pi}\,\frac{1+\alpha\sigma}{1-\alpha\sigma}\,\frac{1-\alpha/\sigma}{1-\alpha^3/\sigma}.\end{aligned} \tag{6.66}$$

The products can be brought into standard form by factorization,

$$\frac{1+\alpha\sigma}{1-\alpha\sigma}\,\frac{1-\alpha/\sigma}{1-\alpha^3/\sigma} = \frac{1-\alpha^2}{1+\alpha^2} + \frac{2}{1+\alpha^2}\,\frac{\alpha\sigma}{1-\alpha\sigma} - \frac{1+\alpha^4}{\alpha^2(1+\alpha^2)}\,\frac{\alpha^3/\sigma}{1-\alpha^3/\sigma}, \tag{6.67}$$

$$\frac{1+\alpha\sigma}{1-\alpha\sigma}\,\frac{\sigma}{\alpha}\,\frac{1-\alpha/\sigma}{1-\alpha\sigma} = -1 - \frac{1+\alpha^2}{\alpha^2}\,\frac{\alpha\sigma}{1-\alpha\sigma} + 2\frac{1-\alpha^2}{\alpha^2}\,\frac{\alpha\sigma}{(1-\alpha\sigma)^2}, \tag{6.68}$$

$$\frac{1+\alpha\sigma}{1-\alpha\sigma}\,\frac{(1-\alpha/\sigma)^2}{(1-\alpha^3/\sigma)^2} = \frac{1-4\alpha^2+4\alpha^4-\alpha^8}{(1-\alpha^4)^2} + \frac{2}{(1+\alpha^2)^2}\,\frac{\alpha\sigma}{1-\alpha\sigma} \tag{6.69}$$

$$-\frac{1+2\alpha^2+2\alpha^6+\alpha^8}{\alpha^4(1+\alpha^2)^2}\,\frac{\alpha^3/\sigma}{1-\alpha^3/\sigma} + \frac{(1-\alpha^2)(1+\alpha^4)}{\alpha^4(1+\alpha^2)}\,\frac{\alpha^3/\sigma}{(1-\alpha^3/\sigma)^2}. \tag{6.70}$$

This gives

$$\begin{aligned}\frac{F_2^2}{P} = \frac{i(1-\alpha^2)}{16\pi(1-\nu)}\Big[&(1+\alpha^2) + \frac{1+\alpha^2}{\alpha^2}\,\frac{\alpha\sigma}{1-\alpha\sigma} - 2\frac{1-\alpha^2}{\alpha^2}\,\frac{\alpha\sigma}{(1-\alpha\sigma)^2}\\ &+\frac{1+\alpha^6}{\alpha^4}\,\frac{\alpha^3/\sigma}{1-\alpha^3/\sigma} - \frac{(1-\alpha^2)(1+\alpha^4)}{\alpha^4}\,\frac{\alpha^3/\sigma}{(1-\alpha^3/\sigma)^2}\Big]\\ &-\frac{i(1-\alpha^2)}{4\pi(1+\alpha^2)}\Big[(1-\alpha^2) + 2\frac{\alpha\sigma}{1-\alpha\sigma} - \frac{1+\alpha^4}{\alpha^2}\,\frac{\alpha^3/\sigma}{1-\alpha^3/\sigma}\Big].\end{aligned} \tag{6.71}$$

In terms of the standard series functions this can also be written as

$$\begin{aligned}\frac{F_2^2}{P} = \frac{i(1-\alpha^2)}{16\pi(1-\nu)}\Big[&(1+\alpha^2) + \frac{1+\alpha^2}{\alpha^2}T_1(\alpha\sigma) - 2\frac{1-\alpha^2}{\alpha^2}T_2(\alpha\sigma)\\ &+\frac{1+\alpha^6}{\alpha^4}\,T_1(\alpha^3/\sigma) - \frac{(1-\alpha^2)(1+\alpha^4)}{\alpha^4}T_2(\alpha^3/\sigma)\Big]\\ &-\frac{i(1-\alpha^2)}{4\pi(1+\alpha^2)}\Big[(1-\alpha^2) + 2T_1(\alpha\sigma) - \frac{1+\alpha^4}{\alpha^2}T_1(\alpha^3/\sigma)\Big].\end{aligned} \tag{6.72}$$

This completes the expansion of the second term of the boundary function for Melan's solution.

6.2.3 Melan : third term

The third term of the boundary function for Melan's solution is, from eq. 6.42,

$$\frac{F_2^3}{P} = \frac{\overline{\psi(z)}}{P}, \tag{6.73}$$

where

$$\begin{aligned}\frac{\psi(z)}{P} = \frac{1}{8\pi(1-\nu)}\Big[&i(3-4\nu)\,\log\frac{z-ih}{z+ih} - \frac{h}{z-ih} - \frac{h}{z+ih}\Big]\\ &-\frac{i}{2\pi}\log\frac{z-ih}{h} - \frac{(1-2\nu)}{4\pi(1-\nu)}\frac{h}{z-ih} + \frac{1}{4\pi(1-\nu)}\frac{hz}{(z-ih)^2}.\end{aligned} \tag{6.74}$$

The various terms can be expressed as follows.

$$\log\frac{z-ih}{z+ih} = -i\theta - \log\alpha + \log(1-\alpha^3\sigma) - \log(1-\alpha/\sigma), \tag{6.75}$$

$$\frac{h}{z-ih} = i\,\frac{1+\alpha^2}{2}\,\frac{1-\alpha\sigma}{1-\alpha^3\sigma}, \tag{6.76}$$

$$\frac{h}{z+ih} = i\,\frac{1+\alpha^2}{2}\,\frac{1}{\alpha\sigma}\,\frac{1-\alpha\sigma}{1-\alpha/\sigma}, \tag{6.77}$$

$$\log\frac{z-ih}{h} = \log\frac{-2i}{1+\alpha^2} + \log(1-\alpha^3\sigma) - \log(1-\alpha\sigma), \tag{6.78}$$

$$\frac{hz}{(z-ih)^2} = i\frac{1-\alpha^4}{4}\,\frac{1-\alpha^2\sigma^2}{(1-\alpha^3\sigma)^2}. \tag{6.79}$$

This gives

$$\frac{\psi(z)}{P} = \frac{3-4\nu}{8\pi(1-\nu)}\big[\theta - i\log\alpha + i\log(1-\alpha^3\sigma) - i\log(1-\alpha/\sigma)\big]$$
$$+\frac{1+\alpha^2}{16\pi(1-\nu)}\big[-i\frac{1-\alpha\sigma}{1-\alpha^3\sigma} - \frac{i}{\alpha\sigma}\,\frac{1-\alpha\sigma}{1-\alpha/\sigma}\big]$$
$$-\frac{i}{2\pi}\big[\log\frac{-2i}{1+\alpha^2} + \log(1-\alpha^3\sigma) - \log(1-\alpha\sigma)\big]$$
$$-\frac{i(1-2\nu)(1+\alpha^2)}{8\pi(1-\nu)}\,\frac{1-\alpha\sigma}{1-\alpha^3\sigma} + \frac{i(1-\alpha^4)}{16\pi(1-\nu)}\,\frac{1-\alpha^2\sigma^2}{(1-\alpha^3\sigma)^2}. \tag{6.80}$$

Taking the complex conjugate gives, with $\overline{\sigma} = 1/\sigma$,

$$\frac{F_2^3}{P} = \frac{3-4\nu}{8\pi(1-\nu)}\big[\theta + i\log\alpha - i\log(1-\alpha^3/\sigma) + i\log(1-\alpha\sigma)\big]$$
$$+\frac{1+\alpha^2}{16\pi(1-\nu)}\big[i\frac{1-\alpha/\sigma}{1-\alpha^3/\sigma} + \frac{i\sigma}{\alpha}\,\frac{1-\alpha/\sigma}{1-\alpha\sigma}\big]$$
$$+\frac{i}{2\pi}\big[\log\frac{2i}{1+\alpha^2} + \log(1-\alpha^3/\sigma) - \log(1-\alpha/\sigma)\big]$$
$$+\frac{i(1-2\nu)(1+\alpha^2)}{8\pi(1-\nu)}\,\frac{1-\alpha/\sigma}{1-\alpha^3/\sigma} - \frac{i(1-\alpha^4)}{16\pi(1-\nu)}\,\frac{1-\alpha^2/\sigma^2}{(1-\alpha^3/\sigma)^2}. \tag{6.81}$$

The various terms in this expression can be written in terms of the functions $T_0(\zeta)$, $T_1(\zeta)$ and $T_2(\zeta)$, in the following way.

$$\log(1-\alpha^3/\sigma) = T_0(\alpha^3/\sigma), \tag{6.82}$$

$$\log(1-\alpha\sigma) = T_0(\alpha\sigma), \tag{6.83}$$

$$\log(1-\alpha/\sigma) = T_0(\alpha/\sigma), \tag{6.84}$$

$$\frac{1-\alpha/\sigma}{1-\alpha^3/\sigma} = 1 - \frac{1-\alpha^2}{\alpha^2}\,\frac{\alpha^3/\sigma}{1-\alpha^3/\sigma} = 1 - \frac{1-\alpha^2}{\alpha^2}T_1(\alpha^3/\sigma), \tag{6.85}$$

$$\frac{\sigma}{\alpha}\,\frac{1-\alpha/\sigma}{1-\alpha\sigma} = -1 + \frac{1-\alpha^2}{\alpha^2}\,\frac{\alpha\sigma}{1-\alpha\sigma} = -1 + \frac{1-\alpha^2}{\alpha^2}T_1(\alpha\sigma), \tag{6.86}$$

$$\frac{1-\alpha^2/\sigma^2}{(1-\alpha^3/\sigma)^2} = 1 + \frac{1+\alpha^4}{\alpha^4}\,\frac{\alpha^3/\sigma}{1-\alpha^3/\sigma} - \frac{1-\alpha^4}{\alpha^4}\,\frac{\alpha^3/\sigma}{(1-\alpha^3/\sigma)^2}$$
$$= 1 + \frac{1+\alpha^4}{\alpha^4}T_1(\alpha^3/\sigma) - \frac{1-\alpha^4}{\alpha^4}T_2(\alpha^3/\sigma). \tag{6.87}$$

Substitution of all these results into (6.81) gives

$$\frac{F_2^3}{P} = \frac{3-4\nu}{8\pi(1-\nu)}\big[\theta + i\log\alpha - iT_0(\alpha^3/\sigma) + iT_0(\alpha\sigma)\big] + \frac{i(1-2\nu)(1+\alpha^2)}{8\pi(1-\nu)} - \frac{i(1-\alpha^4)}{16\pi(1-\nu)}$$
$$-\frac{i(1-\alpha^4)}{16\pi(1-\nu)\alpha^2}\big[T_1(\alpha^3/\sigma) - T_1(\alpha\sigma)\big] + \frac{i}{2\pi}\big[\log\frac{2i}{1+\alpha^2} + T_0(\alpha^3/\sigma) - T_0(\alpha/\sigma)\big]$$
$$-\frac{i(1-2\nu)(1-\alpha^4)}{8\pi(1-\nu)\alpha^2}T_1(\alpha^3/\sigma) - \frac{i(1-\alpha^8)}{16\pi(1-\nu)\alpha^4}T_1(\alpha^3/\sigma) + \frac{i(1-\alpha^4)^2}{16\pi(1-\nu)\alpha^4}T_2(\alpha^3/\sigma). \tag{6.88}$$

This completes the expansion of the third term of the boundary function for Melan's solution.

6.3 Melan : addition of the three terms

The first term is, from (6.56),

$$\frac{F_2^1}{P} = \frac{\theta}{8\pi(1-\nu)} + \frac{i}{8\pi(1-\nu)}(1+\alpha^2-\log\alpha) - \frac{i}{2\pi}\log\frac{-2i}{1+\alpha^2}$$
$$-\frac{i}{8\pi(1-\nu)}\left[(3-4\nu)T_0(\alpha^3\sigma)+T_0(\alpha/\sigma)\right] + \frac{i}{2\pi}T_0(\alpha\sigma) - \frac{i}{8\pi(1-\nu)}\frac{1-\alpha^4}{\alpha^2}T_1(\alpha^3\sigma). \tag{6.89}$$

The second term is, from (6.72),

$$\frac{F_2^2}{P} = \frac{i(1-\alpha^2)}{16\pi(1-\nu)}\Big[(1+\alpha^2)+\frac{1+\alpha^2}{\alpha^2}T_1(\alpha\sigma) - 2\frac{1-\alpha^2}{\alpha^2}T_2(\alpha\sigma)$$
$$+\frac{1+\alpha^6}{\alpha^4}T_1(\alpha^3/\sigma) - \frac{(1-\alpha^2)(1+\alpha^4)}{\alpha^4}T_2(\alpha^3/\sigma)\Big]$$
$$-\frac{i(1-\alpha^2)}{4\pi(1+\alpha^2)}\Big[(1-\alpha^2)+2T_1(\alpha\sigma)-\frac{1+\alpha^4}{\alpha^2}T_1(\alpha^3/\sigma)\Big]. \tag{6.90}$$

The third term is, from (6.88),

$$\frac{F_2^3}{P} = \frac{3-4\nu}{8\pi(1-\nu)}\big[\theta + i\log\alpha - iT_0(\alpha^3/\sigma) + iT_0(\alpha\sigma)\big] + \frac{i(1-2\nu)(1+\alpha^2)}{8\pi(1-\nu)} - \frac{i(1-\alpha^4)}{16\pi(1-\nu)}$$
$$-\frac{i(1-\alpha^4)}{16\pi(1-\nu)\alpha^2}\big[T_1(\alpha^3/\sigma)-T_1(\alpha\sigma)\big] + \frac{i}{2\pi}\big[\log\frac{2i}{1+\alpha^2} + T_0(\alpha^3/\sigma) - T_0(\alpha/\sigma)\big]$$
$$-\frac{i(1-2\nu)(1-\alpha^4)}{8\pi(1-\nu)\alpha^2}T_1(\alpha^3/\sigma) - \frac{i(1-\alpha^8)}{16\pi(1-\nu)\alpha^4}T_1(\alpha^3/\sigma) + \frac{i(1-\alpha^4)^2}{16\pi(1-\nu)\alpha^4}T_2(\alpha^3/\sigma). \tag{6.91}$$

The sum of these three terms can be written as

$$\frac{F_2}{iP} = \frac{\theta}{2\pi i} - Q_1T_0(\alpha\sigma) - Q_2T_0(\alpha^3\sigma) - Q_3T_0(\alpha/\sigma) - Q_4T_0(\alpha^3/\sigma)$$
$$+R_1T_1(\alpha\sigma) + R_2T_1(\alpha^3\sigma) + R_3T_1(\alpha/\sigma) + R_4T_1(\alpha^3/\sigma)$$
$$+S_1T_2(\alpha\sigma) + S_2T_2(\alpha^3\sigma) + S_3T_2(\alpha/\sigma) + S_4T_2(\alpha^3/\sigma), \tag{6.92}$$

where the constant term has been omitted (as this is accounted for by the arbitrary integration constant C), and where

$$Q_1 = -\frac{7-8\nu}{8\pi(1-\nu)}, \tag{6.93}$$

$$Q_2 = \frac{3-4\nu}{8\pi(1-\nu)}, \tag{6.94}$$

$$Q_3 = \frac{5-4\nu}{8\pi(1-\nu)}, \tag{6.95}$$

$$Q_4 = -\frac{1}{8\pi(1-\nu)}, \tag{6.96}$$

$$R_1 = \frac{1-\alpha^4}{8\pi(1-\nu)\alpha^2} - \frac{1-\alpha^2}{2\pi(1+\alpha^2)}, \tag{6.97}$$

$$R_2 = -\frac{1-\alpha^4}{8\pi(1-\nu)\alpha^2}, \tag{6.98}$$

$$R_3 = 0, \tag{6.99}$$

$$R_4 = -\frac{1-\alpha^2}{2\pi(1+\alpha^2)}, \tag{6.100}$$

$$S_1 = -\frac{(1-\alpha^2)^2}{8\pi(1-\nu)\alpha^2}, \tag{6.101}$$

$$S_2 = 0, \tag{6.102}$$

$$S_3 = 0, \tag{6.103}$$

$$S_4 = \frac{(1-\alpha^2)^2}{8\pi(1-\nu)\alpha^2}. \tag{6.104}$$

It may be noted that the first term of equation (6.92) cancels the first term of equation (6.28), as expected.

The function F_2 has now also been expressed as a Laurent series, and we may write,

$$\frac{F_2(\sigma)}{iP} = \frac{\theta}{2\pi i} + C_2 + \sum_{k=1}^{\infty} A_k^2 \sigma^k + \sum_{k=1}^{\infty} D_k^2 \sigma^{-k}. \tag{6.105}$$

The coefficients in these series are

$$A_k^2 = (\frac{Q_1}{k} + R_1 + kS_1)\alpha^k + (\frac{Q_2}{k} + R_2 + kS_2)\alpha^{3k}, \tag{6.106}$$

$$D_k^2 = (\frac{Q_3}{k} + R_3 + kS_3)\alpha^k + (\frac{Q_4}{k} + R_4 + kS_4)\alpha^{3k}. \tag{6.107}$$

Both parts of the boundary function have now been expanded into Laurent series.

6.4 Comparison with numerical integration

The analytical calculation of the coefficients of the Laurent series expansion can be compared with the numerical calculation using Filon's integration method, as presented above. The values are compared in table 6.4, for the case $r/h = 0.8$, $\nu = 0.0$, $K_0 = 0.5$. The numerical values were calculated using a subdivision of the integration interval into 200 parts. It appears that the agreement between the two methods is good, especially for the series of ascending powers. This is even better when a larger number of intervals is being used. The analytical solution is more accurate, and much faster, however, and therefore deserves preference.

	A_k		D_k	
k	numerical	analytical	numerical	analytical
1	-0.097731082	-0.097731082	0.045502752	0.045508367
2	-0.075443172	-0.075443173	0.035046522	0.035063823
3	-0.046289372	-0.046289376	0.024114552	0.024141349
4	-0.026641738	-0.026641745	0.015140013	0.015169941
5	-0.014916942	-0.014916951	0.009038362	0.009066302
6	-0.008221465	-0.008221476	0.005233558	0.005256878
7	-0.004482820	-0.004482831	0.002968103	0.002986125
8	-0.002424608	-0.002424618	0.001657615	0.001670779
9	-0.001302968	-0.001302976	0.000914701	0.000923909
10	-0.000696490	-0.000696497	0.000499878	0.000506101
11	-0.000370630	-0.000370635	0.000270994	0.000275084
12	-0.000196462	-0.000196467	0.000145917	0.000148544
13	-0.000103788	-0.000103791	0.000078113	0.000079767
14	-0.000054665	-0.000054668	0.000041605	0.000042629
15	-0.000028716	-0.000028717	0.000022061	0.000022686
16	-0.000015048	-0.000015049	0.000011652	0.000012029
17	-0.000007869	-0.000007869	0.000006132	0.000006357
18	-0.000004107	-0.000004107	0.000003217	0.000003350
19	-0.000002139	-0.000002140	0.000001683	0.000001760
20	-0.000001113	-0.000001113	0.000000878	0.000000923

Table 6.1. Comparison of calculation methods

7. Validation of the solution

The complete solution of the problem consists of the sum of the three partial solutions. In order to verify the consistency and the accuracy of the solution a computer program has been developed, named MINDLIN. This program enables to obtain numerical results of stresses and displacements in each point of the field, to construct graphical representations in the form of contours of various quantities, and to validate the solution.

The validation consists of the calculation of the integrated surface tractions along the cavity boundary, the surface tractions themselves along the cavity boundary, and the radial normal stress and shear stress along the cavity boundary. All these quantities should be zero. Another validation is the vertical normal stress and the shear stress along the horizontal upper boundary. These quantities should also be zero. It appears that all these conditions are very well satisfied, with errors usually smaller than 0.000001, provided that the number of terms in the Laurent series approximations of the stress functions is taken sufficiently large. The computer program itself calculates a suggestion for the number of terms of the Laurent series to be taken into account. This suggestion is based upon the requirement that the two stress functions, and their derivatives, should converge in the circular ring in the ζ-plane. Following this suggestion usually gives satisfactory results. For very large cavities this may mean that a large number of terms is to be taken into account. For $r/h = 0.99$ the number of terms needed for the series is about 200, and for $r/h = 0.999$ the number of terms needed is about 500. For smaller cavities convergence is much faster. If $r/h = 0.5$, which is still a rather large cavity, only about 30 terms are needed to obtain sufficient accuracy.

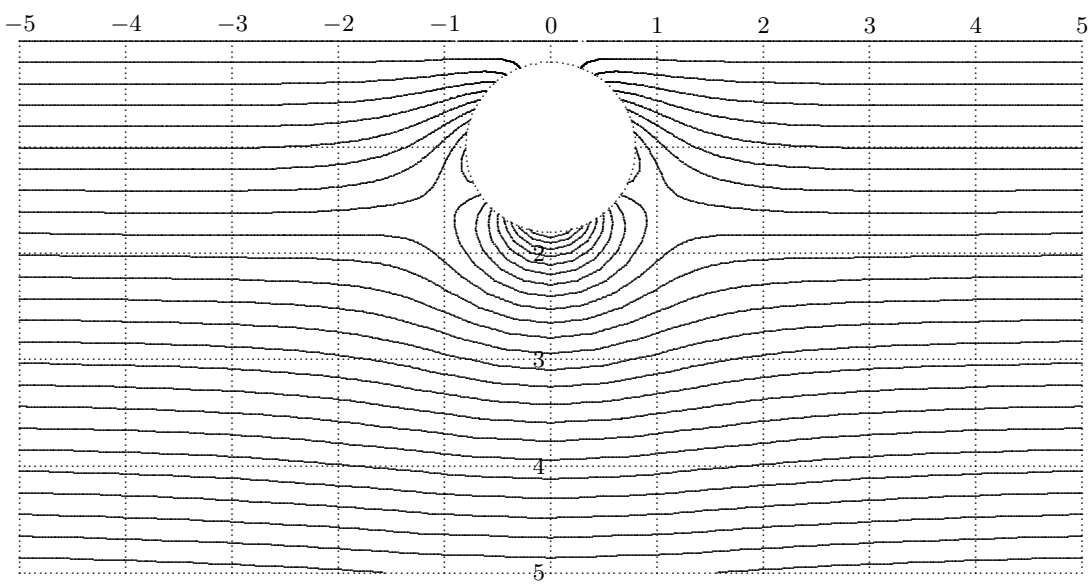

Mindlin : Circular cavity in elastic half plane with uniform gravity.
Complex variable solution by A. Verruijt and J.R. Booker, Sydney 1996.
$K_0 = 1, \nu = 0.5, r/h = 0.8$.

Figure 7.1. Contours of σ_{yy}, vertical normal stress. Contour interval = 0.2 wh.

The calculation of the displacements in the program is based upon the addition of the second and third partial solutions only, which together represent the total effect of the excavation. Because the second solution contains a logarithmic singularity the displacements at infinity are infinitely large. In the program MINDLIN it is assumed that at a certain given point, defined by the coordinates $x = 0, y = -D$, the displacements are zero. This condition ensures that all displacements in the vicinity of the cavity

are finite. It should be remembered that the actual magnitude of the displacements has little physical meaning. Only the displacement differences are meaningful.

As an example some of the results are shown in graphical form. They apply to the case $r/h = 0.8$, $\nu = 0.5$ and $K_0 = 1$. Figure 7.1 shows contours of the stresses σ_{yy}. It can be observed that the stresses far from the cavity are practically in agreement with the gravity field, that the stress σ_{yy} is zero along the upper boundary, and that it is zero at the top and the bottom of the cavity. The program allows to verify these conditions numerically. All boundary conditions are satisfied with great accuracy.

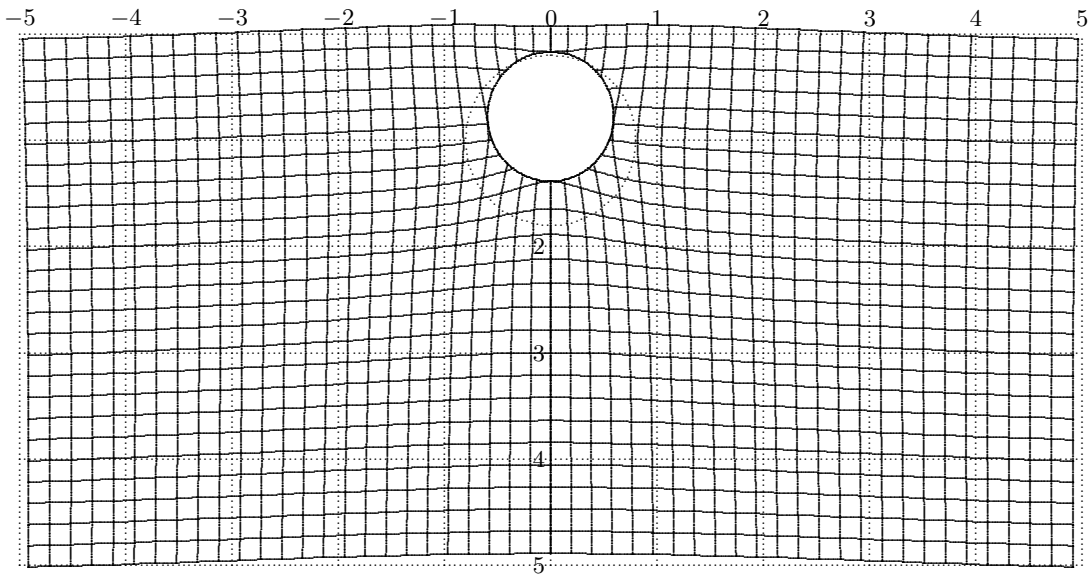

Mindlin : Circular cavity in elastic half plane with uniform gravity.
Complex variable solution by A. Verruijt and J.R. Booker, Sydney 1996.
$K_0 = 1, \nu = 0.5, r/h = 0.8$.

Figure 7.2. Deformations of rectangular mesh. Multiplication factor = 0.5.

Figure 7.2 shows a mesh of squares in the field and its deformations after creation of the cavity. It appears that the size of the cavity is considerably reduced by the release of the stresses. It may be interesting to observe that for very small values of the lateral earth pressure coefficient (e.g. $K_0 = 0$) the shape of the cavity transforms into an ellipse, because of the vertical stress release only.

8. Comparison with Mindlin's results

In 1940 Mindlin published a great number of numerical data, based upon his solution of the problem, using bipolar coordinates. These data can now be verified using the solution obtained in this report. The data will be presented in this chapter in the same format as in Mindlin's paper (Mindlin, 1940). The parameters used by Mindlin for the points on the cavity boundary are α_1 and β, where β can be identified with θ in the complex variable solution, at least along the cavity boundary, and where α_1 is defined by

$$\cosh \alpha_1 = \frac{h}{r}, \tag{8.1}$$

where, as before, h is the depth of the center of the cavity and r is its radius. It can be shown that the relation between the parameter α used in the complex variable solution and Mindlin's α_1 is

$$\alpha = \exp(-\alpha_1). \tag{8.2}$$

α_1	r/h
0.2	0.980328
0.4	0.925007
0.6	0.843551
0.8	0.747700
1.0	0.648054
1.2	0.552286
1.4	0.464922
1.6	0.387978
1.8	0.321805
2.0	0.265802

Table 8.1. Relation between α_1 and r/h

Thus the parameters of the two solutions can easily be expressed into each other, see also table 8.

Mindlin has given extensive tables of the tangential stress along the cavity boundary, for various values of α_1 and β, and for several values of ν and K_0. These stresses are expressed as $\sigma_{tt}/\gamma D$, where D is the diameter of the cavity, i.e. $D = 2r$. The program MINDLIN has an option to calculate the same quantity, and this enables to verify the two solutions. The results of the complex variable analysis are shown in tables 8.2 and 8.3. Comparison with the tables given by Mindlin, which are reproduced in tables 8.4 and 8.5, shows that most of the data are in perfect agreement. Some values are slightly different (by a few %), and a few values differ somewhat more. It is believed that the complex variable solution, which is performed by computer, is the more accurate. It has to be said that it is remarkable that Mindlin did obtain such accurate results without the help of artificial computing power.

α_1	β									
	0	20	40	60	80	100	120	140	160	180
$\nu = 0,\ K_0 = 1$										
0.2	-1.63	-0.66	-0.50	-0.46	-0.51	-0.65	-0.86	-1.09	-1.27	-1.34
0.4	-1.69	-1.07	-0.77	-0.71	-0.69	-0.65	-0.57	-0.49	-0.43	-0.40
0.6	-1.80	-1.42	-1.06	-0.93	-0.86	-0.76	-0.62	-0.46	-0.34	-0.29
0.8	-1.96	-1.72	-1.37	-1.19	-1.07	-0.93	-0.76	-0.59	-0.45	-0.40
1.0	-2.18	-2.01	-1.71	-1.49	-1.33	-1.17	-0.98	-0.80	-0.66	-0.61
1.2	-2.46	-2.33	-2.07	-1.84	-1.65	-1.46	-1.27	-1.09	-0.95	-0.90
1.4	-2.81	-2.71	-2.49	-2.25	-2.03	-1.83	-1.63	-1.44	-1.31	-1.26
1.6	-3.25	-3.17	-2.97	-2.73	-2.50	-2.28	-2.07	-1.89	-1.76	-1.71
1.8	-3.79	-3.72	-3.54	-3.31	-3.07	-2.84	-2.62	-2.44	-2.31	-2.27
2.0	-4.45	-4.39	-4.22	-4.00	-3.75	-3.51	-3.29	-3.11	-2.98	-2.94
$\nu = \frac{1}{4},\ K_0 = 1$										
0.2	-1.63	-0.63	-0.42	-0.35	-0.45	-0.74	-1.18	-1.66	-2.03	-2.17
0.4	-1.67	-1.05	-0.73	-0.66	-0.66	-0.69	-0.74	-0.78	-0.81	-0.85
0.6	-1.77	-1.39	-1.02	-0.89	-0.84	-0.79	-0.73	-0.66	-0.60	-0.58
0.8	-1.93	-1.68	-1.33	-1.15	-1.05	-0.96	-0.85	-0.74	-0.65	-0.62
1.0	-2.14	-1.97	-1.67	-1.45	-1.31	-1.19	-1.06	-0.93	-0.83	-0.79
1.2	-2.41	-2.29	-2.03	-1.80	-1.63	-1.48	-1.33	-1.19	-1.09	-1.05
1.4	-2.76	-2.66	-2.44	-2.21	-2.02	-1.85	-1.69	-1.54	-1.44	-1.40
1.6	-3.19	-3.11	-2.92	-2.69	-2.49	-2.30	-2.13	-1.98	-1.88	-1.84
1.8	-3.73	-3.66	-3.49	-3.27	-3.05	-2.85	-2.67	-2.52	-2.42	-2.38
2.0	-4.39	-4.33	-4.17	-3.96	-3.74	-3.53	-3.34	-3.19	-3.08	-3.05
$\nu = \frac{1}{2},\ K_0 = 1$										
0.2	-1.61	-0.57	-0.26	-0.14	-0.33	-0.91	-1.81	-2.79	-3.56	-3.85
0.4	-1.64	-0.99	-0.63	-0.54	-0.59	-0.78	-1.06	-1.35	-1.58	-1.67
0.6	-1.72	-1.33	-0.93	-0.80	-0.79	-0.85	-0.95	-1.05	-1.12	-1.15
0.8	-1.86	-1.61	-1.25	-1.07	-1.01	-1.01	-1.02	-1.04	-1.05	-1.06
1.0	-2.06	-1.89	-1.58	-1.37	-1.28	-1.23	-1.20	-1.18	-1.16	-1.15
1.2	-2.32	-2.20	-1.94	-1.73	-1.60	-1.52	-1.46	-1.41	-1.38	-1.36
1.4	-2.66	-2.56	-2.35	-2.14	-1.99	-1.88	-1.80	-1.74	-1.69	-1.68
1.6	-3.08	-3.00	-2.82	-2.62	-2.46	-2.33	-2.24	-2.16	-2.11	-2.09
1.8	-3.61	-3.55	-3.39	-3.20	-3.02	-2.88	-2.77	-2.69	-2.63	-2.61
2.0	-4.26	-4.21	-4.06	-3.88	-3.71	-3.56	-3.44	-3.35	-3.29	-3.27

Table 8.2. Tangential stress, $\sigma_{tt}/\gamma D$

α_1	β									
	0	20	40	60	80	100	120	140	160	180
$\nu = 0,\ K_0 = 0$										
0.2	1.22	-0.87	-0.99	-1.12	-0.87	-0.10	1.11	2.44	3.48	3.87
0.4	1.22	-1.62	-1.11	-1.10	-0.88	-0.31	0.55	1.50	2.24	2.52
0.6	1.25	-1.60	-1.61	-1.27	-1.00	-0.47	0.31	1.14	1.79	2.03
0.8	1.29	-1.19	-2.17	-1.67	-1.20	-0.63	0.13	0.93	1.54	1.77
1.0	1.37	-0.80	-2.54	-2.25	-1.56	-0.84	-0.03	0.79	1.40	1.62
1.2	1.47	-0.48	-2.74	-2.89	-2.09	-1.15	-0.20	0.67	1.31	1.55
1.4	1.60	-0.22	-2.86	-3.53	-2.78	-1.60	-0.43	0.58	1.29	1.54
1.6	1.79	0.01	-2.96	-4.19	-3.59	-2.22	-0.76	0.48	1.31	1.60
1.8	2.02	0.23	-3.08	-4.88	-4.55	-3.01	-1.20	0.36	1.39	1.75
2.0	2.32	0.46	-3.24	-5.65	-5.65	-4.00	-1.79	0.19	1.52	1.98
$\nu = \frac{1}{4},\ K_0 = \frac{1}{3}$										
0.2	0.28	-0.77	-0.75	-0.79	-0.69	-0.37	0.13	0.69	1.13	1.30
0.4	0.27	-1.41	-0.95	-0.91	-0.79	-0.47	0.02	0.55	0.97	1.12
0.6	0.26	-1.51	-1.39	-1.11	-0.93	-0.59	-0.11	0.41	0.82	0.97
0.8	0.24	-1.33	-1.87	-1.47	-1.14	-0.75	-0.25	0.27	0.68	0.83
1.0	0.22	-1.16	-2.22	-1.96	-1.46	-0.97	-0.42	0.13	0.54	0.70
1.2	0.20	-1.05	-2.47	-2.50	-1.93	-1.27	-0.62	-0.02	0.42	0.58
1.4	0.18	-1.00	-2.69	-3.07	-2.51	-1.70	-0.89	-0.19	0.29	0.47
1.6	0.16	-0.99	-2.91	-3.67	-3.22	-2.26	-1.25	-0.40	0.17	0.37
1.8	0.15	-1.03	-3.18	-4.32	-4.04	-2.97	-1.73	-0.66	0.05	0.29
2.0	0.13	-1.10	-3.51	-5.06	-5.01	-3.85	-2.34	-0.99	-0.08	0.23
$\nu = \frac{1}{4},\ K_0 = 0$										
0.2	1.23	-0.84	-0.91	-1.01	-0.81	-0.19	0.79	1.87	2.71	3.03
0.4	1.24	-1.59	-1.06	-1.04	-0.85	-0.36	0.39	1.22	1.85	2.09
0.6	1.27	-1.57	-1.57	-1.22	-0.98	-0.50	0.20	0.95	1.52	1.74
0.8	1.32	-1.16	-2.13	-1.63	-1.18	-0.65	0.05	0.78	1.34	1.55
1.0	1.40	-0.76	-2.50	-2.21	-1.54	-0.86	-0.10	0.66	1.25	1.44
1.2	1.51	-0.43	-2.69	-2.85	-2.08	-1.17	-0.26	0.57	1.17	1.39
1.4	1.65	-0.17	-2.81	-3.50	-2.76	-1.62	-0.49	0.48	1.16	1.40
1.6	1.84	0.06	-2.91	-4.15	-3.58	-2.23	-0.81	0.39	1.19	1.48
1.8	2.08	0.29	-3.03	-4.84	-4.53	-3.03	-1.25	0.27	1.28	1.63
2.0	2.39	0.52	-3.19	-5.61	-5.64	-4.01	-1.84	0.11	1.42	1.87
$\nu = \frac{1}{2},\ K_0 = 0$										
0.2	1.24	-0.77	-0.75	-0.80	-0.69	-0.36	0.16	0.74	1.19	1.36
0.4	1.27	-1.54	-0.96	-0.92	-0.79	-0.45	0.07	0.64	1.08	1.25
0.6	1.32	-1.51	-1.49	-1.13	-0.93	-0.56	-0.02	0.56	1.00	1.17
0.8	1.39	-1.09	-2.05	-1.55	-1.14	-0.70	-0.13	0.48	0.94	1.11
1.0	1.48	-0.68	-2.41	-2.14	-1.51	-0.90	-0.24	0.41	0.90	1.08
1.2	1.61	-0.34	-2.60	-2.78	-2.04	-1.20	-0.39	0.35	0.89	1.08
1.4	1.76	-0.07	-2.72	-3.43	-2.73	-1.65	-0.60	0.29	0.90	1.13
1.6	1.95	0.17	-2.81	-4.08	-3.55	-2.27	-0.92	0.21	0.96	1.23
1.8	2.20	0.40	-2.93	-4.77	-4.50	-3.06	-1.35	0.10	1.06	1.40
2.0	2.51	0.64	-3.08	-5.53	-5.61	-4.05	-1.94	-0.05	1.21	1.65

Table 8.3. Tangential stress, $\sigma_{tt}/\gamma D$

α_1	β									
	0	20	40	60	80	100	120	140	160	180
$\nu = 0$, $K_0 = 1$										
0.2	-1.63	...	...	...	...	...	...	...	...	-1.35
0.4	-1.69	-1.07	-0.77	-0.71	-0.69	-0.65	-0.57	-0.49	-0.43	-0.40
0.6	-1.80	-1.42	-1.13	-0.93	-0.86	-0.76	-0.62	-0.46	-0.34	-0.29
0.8	-1.96	-1.72	-1.37	-1.20	-1.07	-0.93	-0.74	-0.59	-0.45	-0.40
1.0	-2.18	-2.01	-1.71	-1.49	-1.33	-1.17	-0.98	-0.80	-0.66	-0.61
1.2	-2.46	-2.33	-2.07	-1.84	-1.64	-1.46	-1.27	-1.08	-0.95	-0.90
1.4	-2.81	-2.71	-2.48	-2.24	-2.03	-1.82	-1.64	-1.45	-1.31	-1.26
1.6	-3.25	-3.17	-2.97	-2.73	-2.50	-2.28	-2.07	-1.89	-1.76	-1.71
1.8	-3.79	-3.72	-3.54	-3.31	-3.07	-2.84	-2.62	-2.44	-2.31	-2.27
2.0	-4.45	-4.42	-4.22	-4.00	-3.75	-3.51	-3.29	-3.11	-2.98	-2.94
$\nu = \frac{1}{4}$, $K_0 = 1$										
0.2	-1.63	...	...	...	...	...	...	...	...	-2.18
0.4	-1.67	-1.05	-0.73	-0.66	-0.66	-0.69	-0.74	-0.78	-0.81	-0.85
0.6	-1.77	-1.39	-1.02	-0.89	-0.84	-0.79	-0.73	-0.66	-0.60	-0.58
0.8	-1.93	-1.68	-1.33	-1.16	-1.05	-0.96	-0.83	-0.74	-0.65	-0.62
1.0	-2.14	-1.97	-1.67	-1.45	-1.31	-1.19	-1.06	-0.93	-0.83	-0.79
1.2	-2.41	-2.29	-2.03	-1.80	-1.63	-1.48	-1.34	-1.19	-1.09	-1.06
1.4	-2.76	-2.66	-2.44	-2.21	-2.01	-1.84	-1.69	-1.55	-1.43	-1.39
1.6	-3.19	-3.11	-2.92	-2.69	-2.49	-2.30	-2.13	-1.98	-1.88	-1.84
1.8	-3.73	-3.66	-3.49	-3.27	-3.04	-2.85	-2.67	-2.52	-2.42	-2.38
2.0	-4.39	-4.36	-4.17	-3.96	-3.74	-3.53	-3.34	-3.19	-3.08	-3.05
$\nu = \frac{1}{2}$, $K_0 = 1$										
0.2	-1.61	...	...	...	...	...	...	...	...	-3.85
0.4	-1.64	-0.99	-0.63	-0.54	-0.59	-0.78	-1.06	-1.35	-1.58	-1.67
0.6	-1.73	-1.33	-0.93	-0.80	-0.79	-0.85	-0.95	-1.05	-1.12	-1.15
0.8	-1.86	-1.61	-1.25	-1.08	-1.01	-1.01	-1.01	-1.04	-1.05	-1.06
1.0	-2.06	-1.89	-1.58	-1.37	-1.28	-1.23	-1.20	-1.18	-1.16	-1.15
1.2	-2.32	-2.20	-1.94	-1.73	-1.60	-1.52	-1.46	-1.41	-1.38	-1.37
1.4	-2.66	-2.56	-2.35	-2.13	-1.98	-1.87	-1.81	-1.74	-1.69	-1.67
1.6	-3.08	-3.00	-2.82	-2.62	-2.46	-2.33	-2.24	-2.16	-2.11	-2.09
1.8	-3.61	-3.55	-3.39	-3.20	-3.02	-2.88	-2.77	-2.69	-2.63	-2.61
2.0	-4.26	-4.24	-4.06	-3.88	-3.71	-3.56	-3.44	-3.35	-3.29	-3.27

Table 8.4. Tangential stress, $\sigma_{tt}/\gamma D$, Mindlin's results

α_1	β									
	0	20	40	60	80	100	120	140	160	180
$\nu = 0,\ K_0 = 0$										
0.2	1.24	...	...	...	...	...	...	...	...	3.87
0.4	1.22	-1.62	-1.04	-1.03	-1.04	-0.53	0.73	1.89	2.16	2.05
0.6	1.25	-1.60	-1.69	-1.27	-1.00	-0.45	0.31	1.14	1.79	2.03
0.8	1.29	-2.43	-2.18	-1.68	-1.20	-0.63	0.15	0.93	1.54	1.77
1.0	1.36	-0.81	-2.53	-2.23	-1.47	-0.84	0.05	0.77	1.41	1.66
1.2	1.47	-0.48	-2.74	-2.89	-2.09	-1.07	-0.20	0.68	1.31	1.55
1.4	1.61	-0.22	-2.86	-3.53	-2.53	-1.44	-0.44	0.58	1.29	1.55
1.6	1.79	0.01	-2.96	-4.19	-3.59	-2.22	-0.75	0.48	1.31	1.60
1.8	2.04	0.24	-3.09	-4.89	-4.55	-3.00	-1.19	0.38	1.38	1.74
2.0	2.33	0.43	-3.24	-5.65	-5.65	-4.00	-1.79	0.19	1.52	1.98
$\nu = \frac{1}{4},\ K_0 = \frac{1}{3}$										
0.2	0.29	...	...	...	...	...	...	...	...	1.29
0.4	0.26	-1.41	-0.90	-0.87	-0.89	-0.61	0.14	0.81	0.91	0.79
0.6	0.26	-1.51	-1.39	-1.11	-0.93	-0.58	-0.11	0.41	0.82	0.97
0.8	0.24	-2.15	-1.87	-1.48	-1.14	-0.75	-0.23	0.27	0.68	0.83
1.0	0.22	-1.17	-2.22	-1.95	-1.41	-0.97	-0.44	0.12	0.56	0.72
1.2	0.21	-1.05	-2.47	-2.50	-1.93	-1.22	-0.62	-0.02	0.42	0.58
1.4	0.19	-1.00	-2.69	-3.07	-2.35	-1.59	-0.89	-0.20	0.30	0.48
1.6	0.17	-0.99	-2.92	-3.67	-3.22	-2.26	-1.25	-0.40	0.17	0.37
1.8	0.15	-1.02	-3.19	-4.33	-4.03	-2.96	-1.73	-0.64	0.04	0.29
2.0	0.13	-1.12	-3.51	-5.06	-5.00	-3.85	-2.34	-0.99	-0.08	0.23
$\nu = \frac{1}{4},\ K_0 = 0$										
0.2	1.25	...	...	...	...	...	...	...	...	3.03
0.4	1.22	-1.60	-0.99	-0.97	-1.00	-0.57	0.57	1.61	1.78	1.61
0.6	1.27	-1.57	-1.57	-1.22	-0.97	-0.48	0.20	0.95	1.52	1.74
0.8	1.33	-2.39	-2.14	-1.64	-1.18	-0.65	0.07	0.78	1.34	1.55
1.0	1.40	-0.77	-2.49	-2.20	-1.45	-0.87	-0.13	0.64	1.25	1.48
1.2	1.52	-0.44	-2.70	-2.85	-2.08	-1.09	-0.27	0.57	1.17	1.40
1.4	1.66	-0.17	-2.81	-3.49	-2.52	-1.46	-0.50	0.48	1.16	1.41
1.6	1.85	0.07	-2.91	-4.15	-3.58	-2.23	-0.81	0.39	1.19	1.48
1.8	2.10	0.29	-3.04	-4.85	-4.53	-3.02	-1.24	0.30	1.27	1.62
2.0	2.39	0.49	-3.19	-5.61	-5.64	-4.01	-1.84	0.11	1.42	1.87
$\nu = \frac{1}{2},\ K_0 = 0$										
0.2	1.27	...	...	...	...	...	...	...	...	1.36
0.4	1.35	-1.54	-0.90	-0.86	-0.94	-0.66	0.25	1.03	1.01	0.78
0.6	1.32	-1.51	-1.49	-1.13	-0.93	-0.54	-0.02	0.56	1.00	1.17
0.8	1.39	-2.32	-2.05	-1.56	-1.14	-0.70	-0.11	0.48	0.94	1.11
1.0	1.48	-0.69	-2.41	-2.12	-1.42	-0.91	-0.27	0.39	0.92	1.12
1.2	1.61	-0.35	-2.61	-2.78	-2.04	-1.13	-0.39	0.35	0.89	1.09
1.4	1.76	-0.07	-2.72	-3.42	-2.49	-1.50	-0.61	0.28	0.90	1.13
1.6	1.96	0.18	-2.82	-4.08	-3.55	-2.27	-0.92	0.21	0.96	1.23
1.8	2.22	0.41	-2.94	-4.78	-4.51	-3.05	-1.34	0.13	1.06	1.39
2.0	2.52	0.61	-3.08	-5.54	-5.61	-4.04	-1.94	-0.05	1.21	1.65

Table 8.5. Tangential stress, $\sigma_{tt}/\gamma D$, Mindlin's results

9. Cylindrical cavity in infinite elastic medium

In this chapter the solution for the creation of a cylindrical cavity in an elastic material of uniform unit weight and of infinite extent is presented. This solution can be considered as a first approximation of the solution of Mindlin's problem, which may be valid if the location of the cavity is very deep, below the stress free boundary of the half plane. The characteristic parameters of the solution are the coefficient of initial lateral stress K_0 and Poisson's ratio ν. It should be noted that the notations in this chapter are slightly different from those in earlier chapters. The vertical coordinate, for instance, is denoted by z rather than y.

9.1 Gravity stresses

The stresses in a homogeneous material of infinite extent (without any cavity), with uniform gravity in positive z-direction, are supposed to be

$$\sigma_{xx} = -K_0\gamma(z+h), \tag{9.1}$$

$$\sigma_{yy} = -K_0\gamma(z+h), \tag{9.2}$$

$$\sigma_{zz} = -\gamma(z+h), \tag{9.3}$$

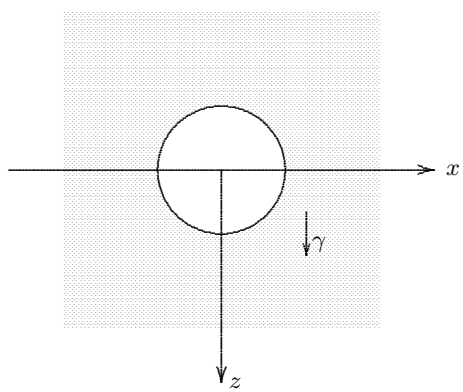

Figure 9.1. Circular cavity in infinite medium

where γ is the unit weight of the material, K_0 is a given coefficient (the coefficient of initial lateral stress), and h is the depth of the origin (the center of the cavity to be excavated later) below the surface at which the stresses are supposed to be zero (the free surface). It is assumed that the radius of the cavity a is very small compared to the depth h. It should be noted that the sign convention is that tensile stresses are condidered as positive. The state of stress defined by eqs. (9.1) – (9.3) is considered as a given initial state of stress. In this initial state the shear stresses σ_{xy}, σ_{yz} and σ_{zx} are all equal to zero.

It will be convenient to express the stresses in polar coordinates, using the standard transformation formulas. This gives

$$\sigma_{rr} = -\gamma(z+h)\big[\frac{K_0x^2+z^2}{r^2}\big], \tag{9.4}$$

$$\sigma_{tt} = -\gamma(z+h)\big[\frac{x^2+K_0z^2}{r^2}\big], \tag{9.5}$$

$$\sigma_{r\theta} = \gamma(z+h)\big[\frac{(1-K_0)xz}{r^2}\big]. \tag{9.6}$$

9.2 Cylindrical cavity

9.2.1 Upward force

For the case of the creation of a cylindrical cavity (the excavation of a tunnel) the state of stress and strain is modified by the application of an upward force, of magnitude $\gamma\pi a^2$, where a is the radius of the cavity. The elastic solution of the basic problem of a force at a point of an infinite plane is (Sneddon, 1951; Timoshenko & Goodier, 1951)

$$\sigma_{xx} = \frac{\gamma a^2 z}{4(1-\nu)r^2}\,\big[\frac{2x^2}{r^2} - (1-2\nu)\big], \tag{9.7}$$

$$\sigma_{zz} = \frac{\gamma a^2 z}{4(1-\nu)r^2}\,\big[\frac{2z^2}{r^2} + (1-2\nu)\big], \tag{9.8}$$

$$\sigma_{xz} = \frac{\gamma a^2 x}{4(1-\nu)r^2}\,\big[\frac{2z^2}{r^2} + (1-2\nu)\big]. \tag{9.9}$$

In this solution the presence of an eventual cavity is ignored.

In polar coordinates the stresses are, using the transformation formulas for stresses,

$$\sigma_{rr} = \gamma z\,\frac{3-2\nu}{4(1-\nu)}\frac{a^2}{r^2}, \tag{9.10}$$

$$\sigma_{tt} = -\gamma z\,\frac{1-2\nu}{4(1-\nu)}\frac{a^2}{r^2}, \tag{9.11}$$

$$\sigma_{r\theta} = -\gamma x\,\frac{1-2\nu}{4(1-\nu)}\frac{a^2}{r^2}. \tag{9.12}$$

It can be shown that the resultant force of this system on a circle around the origin is indeed a force $\gamma\pi a^2$ in upward direction.

9.2.2 Gravity and an upward force

The two states of stress can be added to give the combined effect of gravity and the upward force,

$$\sigma_{rr} = -\gamma(z+h)\big[\frac{K_0x^2+z^2}{r^2}\big] + \gamma z\,\frac{3-2\nu}{4(1-\nu)}\frac{a^2}{r^2}, \tag{9.13}$$

$$\sigma_{tt} = -\gamma(z+h)\big[\frac{x^2+K_0z^2}{r^2}\big] - \gamma z\,\frac{1-2\nu}{4(1-\nu)}\frac{a^2}{r^2}, \tag{9.14}$$

$$\sigma_{r\theta} = \gamma(z+h)\big[\frac{(1-K_0)xz}{r^2}\big] - \gamma x\,\frac{1-2\nu}{4(1-\nu)}\frac{a^2}{r^2}. \tag{9.15}$$

These can also be written in polar coordinates as

$$\sigma_{rr} = -\gamma h - \gamma r\big[1 - \frac{3-2\nu}{4(1-\nu)}\frac{a^2}{r^2}\big]\cos\theta + \gamma h(1-K_0)\sin^2\theta \tag{9.16}$$

$$+\gamma r(1-K_0)\sin^2\theta\cos\theta, \tag{9.17}$$

$$\sigma_{tt} = -\gamma h - \gamma r\big[1 + \frac{1-2\nu}{4(1-\nu)}\frac{a^2}{r^2}\big]\cos\theta + \gamma h(1-K_0)\cos^2\theta + \gamma r(1-K_0)\cos^3\theta, \tag{9.18}$$

$$\sigma_{r\theta} = -\gamma r\big[\frac{1-2\nu}{4(1-\nu)}\frac{a^2}{r^2}\big]\sin\theta + \gamma h(1-K_0)\sin\theta\cos\theta + \gamma r(1-K_0)\sin\theta\cos\theta. \tag{9.19}$$

It may be more convenient to formulate these expressions in the form of Fourier series. This can be done by noting that

$$\sin\theta\cos\theta = \tfrac{1}{2}\sin 2\theta, \tag{9.20}$$

$$\sin^2\theta = \tfrac{1}{2}(1-\cos 2\theta), \tag{9.21}$$

$$\cos^2\theta = \tfrac{1}{2}(1+\cos 2\theta), \tag{9.22}$$

$$\sin^2\theta\cos\theta = \tfrac{1}{4}(\cos\theta - \cos 3\theta), \tag{9.23}$$

$$\sin\theta\cos^2\theta = \tfrac{1}{4}(\sin 3\theta + \sin\theta). \tag{9.24}$$

$$\cos^3\theta = \tfrac{1}{4}(\cos 3\theta + 3\cos\theta). \tag{9.25}$$

Using these relations eqs. (9.17) – (9.19) can be written as

$$\sigma_{rr} = -\tfrac{1}{2}\gamma h(1+K_0) - \tfrac{1}{4}\gamma r\big[3+K_0 - \frac{3-2\nu}{1-\nu}\frac{a^2}{r^2}\big]\cos\theta - \tfrac{1}{2}\gamma h(1-K_0)\cos 2\theta \tag{9.26}$$

$$-\tfrac{1}{4}\gamma r(1-K_0)\cos 3\theta, \tag{9.27}$$

$$\sigma_{tt} = -\tfrac{1}{2}\gamma h(1+K_0) - \tfrac{1}{4}\gamma r\big[1+3K_0 + \frac{1-2\nu}{1-\nu}\frac{a^2}{r^2}\big]\cos\theta + \tfrac{1}{2}\gamma h(1-K_0)\cos 2\theta \tag{9.28}$$

$$+\tfrac{1}{4}\gamma r(1-K_0)\cos 3\theta, \tag{9.29}$$

$$\sigma_{r\theta} = \tfrac{1}{4}\gamma r\big[1-K_0 - \frac{1-2\nu}{1-\nu}\frac{a^2}{r^2}\big]\sin\theta + \tfrac{1}{2}\gamma h(1-K_0)\sin 2\theta + \tfrac{1}{4}\gamma r(1-K_0)\sin 3\theta. \tag{9.30}$$

On the boundary of the cavity, for $r=a$, the stresses are

$$r=a: \sigma_{rr} = -\tfrac{1}{2}\gamma h(1+K_0) + \tfrac{1}{4}\gamma a\big[\frac{\nu}{1-\nu} - K_0\big]\cos\theta - \tfrac{1}{2}\gamma h(1-K_0)\cos 2\theta \tag{9.31}$$

$$-\tfrac{1}{4}\gamma a(1-K_0)\cos 3\theta, \tag{9.32}$$

$$r=a: \sigma_{tt} = -\tfrac{1}{2}\gamma h(1+K_0) - \tfrac{1}{4}\gamma a\big[\frac{2-3\nu}{1-\nu} + 3K_0\big]\cos\theta + \tfrac{1}{2}\gamma h(1-K_0)\cos 2\theta \tag{9.33}$$

$$+\tfrac{1}{4}\gamma a(1-K_0)\cos 3\theta, \tag{9.34}$$

$$r=a: \sigma_{r\theta} = \tfrac{1}{4}\gamma a\big[\frac{\nu}{1-\nu} - K_0\big]\sin\theta + \tfrac{1}{2}\gamma h(1-K_0)\sin 2\theta \tag{9.35}$$

$$+\tfrac{1}{4}\gamma a(1-K_0)\sin 3\theta. \tag{9.36}$$

These stresses do not satisfy the boundary conditions of a cavity. This will be considered in some more detail in the next section.

9.3 Atmospheric cavity

Consider an isolated cylindrical cavity, filled with gas, in an infinite medium. The pressure in the gas is assumed to be equal to the atmospheric pressure, which is the zero level of all stresses. If the weight of the gas is neglected the boundary conditions now are

$$r=a \;:\; \sigma_{rr} = 0, \tag{9.37}$$

$$r=a \;:\; \sigma_{r\theta} = 0. \tag{9.38}$$

These conditions are not satisfied by the stress state of the previous section, which consists of a simple superposition of the gravity stresses and an upward force to take into account the loss of weight. Therefore

some more solutions are added, taken from the general solution of elasticity problems in polar coordinates (Timoshenko & Goodier, 1951).

By adding solutions of order 0, 1, 2 and 3 the boundary values will be as follows.

$$r = a : \sigma_{rr} = -\tfrac{1}{2}\gamma h(1+K_0) - 2\mu A_0 + \tfrac{1}{4}\gamma a\big[\frac{\nu}{1-\nu} - K_0\big]\cos\theta - 4\mu A_1 \cos\theta$$
$$-\tfrac{1}{2}\gamma h(1-K_0)\cos 2\theta + C_2\mu\cos 2\theta - \tfrac{1}{4}\gamma a(1-K_0)\cos 3\theta + C_3\mu\cos 3\theta, \tag{9.39}$$

$$r = a : \sigma_{tt} = -\tfrac{1}{2}\gamma h(1+K_0) + 2\mu A_0 - \tfrac{1}{4}\gamma a\big[\frac{2-3\nu}{1-\nu} + 3K_0\big]\cos\theta + 4\mu A_1 \cos\theta$$
$$+\tfrac{1}{2}\gamma h(1-K_0)\cos 2\theta + 3C_2\mu\cos 2\theta + \tfrac{1}{4}\gamma a(1-K_0)\cos 3\theta + 3C_3\mu\cos 3\theta, \tag{9.40}$$

$$r = a : \sigma_{r\theta} = +\tfrac{1}{4}\gamma a\big[\frac{\nu}{1-\nu} - K_0\big]\sin\theta - 4\mu A_1 \sin\theta$$
$$+\tfrac{1}{2}\gamma h(1-K_0)\sin 2\theta - C_2\mu\sin 2\theta + \tfrac{1}{4}\gamma a(1-K_0)\sin 3\theta - C_3\mu\sin 3\theta. \tag{9.41}$$

The two boundary conditions can be satisfied if

$$A_0\mu = -\tfrac{1}{4}\gamma h a^2(1+K_0), \tag{9.42}$$

$$A_1\mu = \tfrac{1}{16}\gamma a^4\big[\frac{\nu}{1-\nu} - K_0\big], \tag{9.43}$$

$$C_2\mu = \tfrac{1}{2}\gamma h(1-K_0), \tag{9.44}$$

$$C_3\mu = \tfrac{1}{4}\gamma a(1-K_0). \tag{9.45}$$

The boundary values now are

$$r = a \ : \ \sigma_{rr} = 0, \tag{9.46}$$

$$r = a \ : \ \sigma_{tt} = -\gamma h(1+K_0) - \tfrac{1}{2}\gamma a\big[\frac{1-2\nu}{1-\nu} + 2K_0\big]\cos\theta$$
$$+2\gamma h(1-K_0)\cos 2\theta + \gamma a(1-K_0)\cos 3\theta, \tag{9.47}$$

$$r = a \ : \ \sigma_{r\theta} = 0. \tag{9.48}$$

The total state of stress is, superimposing all solutions, and using the values (9.42) – (9.45) for the constants,

$$\sigma_{rr} = -\tfrac{1}{2}\gamma h(1+K_0)\big[1-\frac{a^2}{r^2}\big] - \tfrac{1}{4}\gamma r\big[1-\frac{a^2}{r^2}\big]\big[3+K_0\big(1+\frac{a^2}{r^2}\big) - \frac{\nu}{1-\nu}\frac{a^2}{r^2}\big]\cos\theta$$
$$-\tfrac{1}{2}\gamma h(1-K_0)\big[1-\frac{a^2}{r^2}\big]\big[1-3\frac{a^2}{r^2}\big]\cos 2\theta$$
$$-\tfrac{1}{4}\gamma r(1-K_0)\big[1-\frac{a^2}{r^2}\big]\big[1+\frac{a^2}{r^2}-4\frac{a^4}{r^4}\big]\cos 3\theta, \tag{9.49}$$

$$\sigma_{tt} = -\tfrac{1}{2}\gamma h(1+K_0)\big[1+\frac{a^2}{r^2}\big] - \tfrac{1}{4}\gamma r\big[1+3K_0+\frac{1-2\nu}{1-\nu}\frac{a^2}{r^2} - \big(\frac{\nu}{1-\nu}-K_0\big)\frac{a^4}{r^4}\big]\cos\theta$$
$$+\tfrac{1}{2}\gamma h(1-K_0)\big[1+3\frac{a^4}{r^4}\big]\cos 2\theta$$
$$+\tfrac{1}{4}\gamma r(1-K_0)\big[1-\frac{a^4}{r^4}+4\frac{a^6}{r^6}\big]\cos 3\theta, \tag{9.50}$$

$$\sigma_{r\theta} = \tfrac{1}{4}\gamma r\big[1 - \frac{a^2}{r^2}\big]\big[1 + \frac{\nu}{1-\nu}\frac{a^2}{r^2} - K_0\big(1 + \frac{a^2}{r^2}\big)\big]\sin\theta$$
$$+\tfrac{1}{2}\gamma h(1-K_0)\big[1 - \frac{a^2}{r^2}\big]\big[1 + 3\frac{a^2}{r^2}\big]\sin 2\theta$$
$$+\tfrac{1}{4}\gamma r(1-K_0)\big[1 - \frac{a^2}{r^2}\big]\big[1 + \frac{a^2}{r^2} - 4\frac{a^4}{r^4}\big]\sin 3\theta. \tag{9.51}$$

On the boundary of the cavity, for $r = a$, these expressions reduce to the boundary values (9.46) – (9.48).

The transformation formulas to cartesian coordinates are

$$\sigma_{xx} = \sigma_{rr}\frac{x^2}{r^2} + \sigma_{tt}\frac{z^2}{r^2} + 2\sigma_{r\theta}\frac{xz}{r^2}, \tag{9.52}$$

$$\sigma_{zz} = \sigma_{rr}\frac{z^2}{r^2} + \sigma_{tt}\frac{x^2}{r^2} - 2\sigma_{r\theta}\frac{xz}{r^2}, \tag{9.53}$$

$$\sigma_{xz} = \sigma_{rr}\frac{xz}{r^2} - \sigma_{tt}\frac{xz}{r^2} + \sigma_{r\theta}\frac{z^2 - x^2}{r^2}. \tag{9.54}$$

These equations enable to determine the stress components in cartesian coordinates. It may be noted that in equations (9.49) – (9.51)

$$\cos\theta = \frac{z}{r}, \tag{9.55}$$

$$\sin\theta = \frac{x}{r}, \tag{9.56}$$

$$\cos 2\theta = \frac{z^2 - x^2}{r^2}, \tag{9.57}$$

$$\sin 2\theta = \frac{2xz}{r^2}, \tag{9.58}$$

$$\cos 3\theta = \frac{z(z^2 - 3x^2)}{r^3}, \tag{9.59}$$

$$\sin 3\theta = \frac{x(3z^2 - x^2)}{r^3}. \tag{9.60}$$

9.4 Displacements

In this section the displacements due to the excavation of the cavity will be determined. This means that the displacements are considered with respect to the position in the initial state.

The displacements due to the singular solution of the point load in an infinite medium are

$$u_x = -\frac{\gamma a^2}{8\mu(1-\nu)}\,\frac{xz}{r^2}, \tag{9.61}$$

$$u_z = \frac{\gamma a^2}{8\mu(1-\nu)}\big[(3-4\nu)\log\big(\frac{r}{d}\big) + \frac{x^2}{r^2}\big], \tag{9.62}$$

where d denotes the depth of a fixed point.

The displacements due to the additional solutions can be expressed in terms of cartesian coordinates by using the transformation formulas

$$u_x = u_r\sin\theta + u_t\cos\theta = u_r\frac{x}{r} + u_t\frac{z}{r}, \tag{9.63}$$

$$u_z = u_r\cos\theta - u_t\sin\theta = u_r\frac{z}{r} - u_t\frac{x}{r}. \tag{9.64}$$

This gives

$$u_x = \frac{A_0 a^2 x}{r^2} + \frac{2A_1 a^3 xz}{r^4} + \frac{C_2 a^2 x}{2r^4}\big[4(x^2 - \nu r^2) + (3z^2 - x^2)\frac{a^2}{r^2}\big]$$
$$+\frac{C_3 a^3 xz}{2r^6}\big[-2(z^2 - 3x^2) + (1 - 4\nu)(z^2 - x^2) + 4(z^2 - x^2)\frac{a^2}{r^2}\big], \tag{9.65}$$

$$u_z = \frac{A_0 a^2 z}{r^2} + \frac{A_1 a^3 (z^2 - x^2)}{r^4} + \frac{C_2 a^2 z}{2r^4}\big[4(\nu r^2 - z^2) + (z^2 - 3x^2)\frac{a^2}{r^2}\big]$$
$$+\frac{C_3 a^3}{4r^6}\big[4z^2(3x^2 - z^2) + (1 - 4\nu)(x^4 - z^4) + 2(x^4 - 6x^2 z^2 + z^4)\frac{a^2}{r^2}\big]. \tag{9.66}$$

In the program MINDLIN the approximate solution derived in this chapter can also be presented. It appears that this approximation is reasonably good when the parameter r/h is very small, indicating a small deep cavity.

A. BOUSSINESQ PROBLEMS

In this appendix a general solution is derived for the stresses and displacements in a half plane, for the case of a loading at the surface consisting of a symmetric distribution of normal stresses, see figure A.1. It should be noted that the surface $y = 0$ is free of shear stresses, and the distribution of the normal

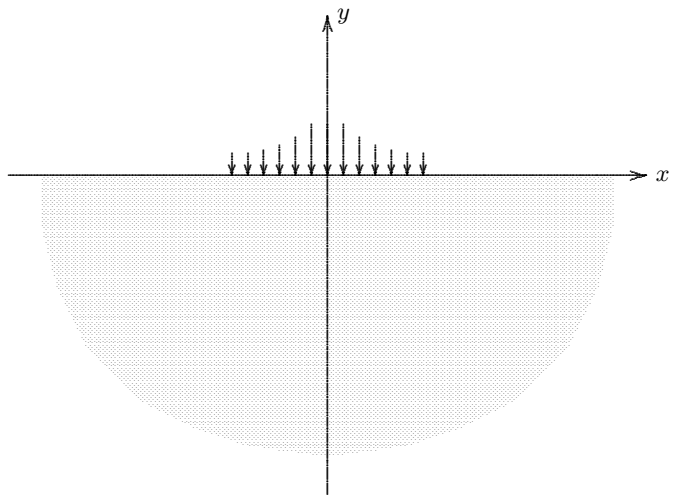

Figure A.1. Boussinesq problem.

stresses at that surface is symmetric.

A general solution will be derived, using the Fourier transform method (Sneddon, 1951).

A.1 Basic equations for plane strain elasticity

The basic equations for a homogeneous isotropic linear elastic material, deforming under plane strain conditions are the equations of equilibrium, Hooke's law, and the equations of compatibility. The equations can be presented in a compact form by expressing the equations of equilibrium in terms of the displacements u and v in x- and y-direction, respectively. These equations (the Navier equations) are

$$m\frac{\partial e}{\partial x} + \frac{\partial^2 u}{\partial x^2} + \frac{\partial^2 u}{\partial y^2} = 0, \tag{A.1}$$

$$m\frac{\partial e}{\partial z} + \frac{\partial^2 v}{\partial x^2} + \frac{\partial^2 v}{\partial y^2} = 0, \tag{A.2}$$

where e is the volume strain,

$$e = \frac{\partial u}{\partial x} + \frac{\partial v}{\partial y}, \tag{A.3}$$

and m is an elastic parameter, related to Poisson's ratio ν or the Lamé constants λ and μ by

$$m = \frac{1}{1-2\nu} = \frac{\lambda+\mu}{\mu}. \tag{A.4}$$

The stresses can be derived from the displacements by the relations

$$\frac{\sigma_{xx}}{\mu} = (m-1)e + 2\frac{\partial u}{\partial x}, \tag{A.5}$$

$$\frac{\sigma_{yy}}{\mu} = (m-1)e + 2\frac{\partial v}{\partial y}, \tag{A.6}$$

$$\frac{\sigma_{xy}}{\mu} = \frac{\partial u}{\partial y} + \frac{\partial v}{\partial x}. \tag{A.7}$$

A.2 Fourier transforms

For a symmetrical type of loading it can be expected that the vertical displacement v is also symmetric, and the horizontal displacement u is anti-symmetric. In that case it is appropriate to express these displacements as

$$u(x,y) = \int_0^\infty U(\alpha,y)\sin(\alpha x)\,d\alpha, \tag{A.8}$$

$$v(x,y) = \int_0^\infty V(\alpha,y)\cos(\alpha x)\,d\alpha, \tag{A.9}$$

where U and V now are the Fourier transforms of u and v. The inverse transforms are (Sneddon, 1951)

$$U(\alpha,y) = \frac{2}{\pi}\int_0^\infty u(x,y)\sin(\alpha x)\,dx, \tag{A.10}$$

$$V(\alpha,z) = \frac{2}{\pi}\int_0^\infty v(x,y)\cos(\alpha x)\,dx. \tag{A.11}$$

The volume strain e can be expressed as

$$e(x,y) = \int_0^\infty E(\alpha,y)\cos(\alpha x)\,d\alpha, \tag{A.12}$$

where

$$E = \alpha U + \frac{\partial V}{\partial y}. \tag{A.13}$$

The two basic differential equations (A.1) and (A.2) are satisfied when the Fourier transforms satisfy the equations

$$-m\alpha^2 U - m\alpha\frac{\partial V}{\partial y} + \frac{\partial^2 U}{\partial y^2} - \alpha^2 U = 0, \tag{A.14}$$

$$m\alpha\frac{\partial U}{\partial y} + m\frac{\partial^2 V}{\partial y^2} + \frac{\partial^2 V}{\partial y^2} - \alpha^2 V = 0. \tag{A.15}$$

This is the transformed form of the problem.

A.3 Solution

The general solution of the equations (A.14) and (A.15), vanishing for $y \to -\infty$, is

$$U = [A + m\alpha y B]\exp(\alpha y), \tag{A.16}$$

$$V = [-A + (m+2)B - m\alpha y B]\exp(\alpha y), \tag{A.17}$$

where A and B are as yet undetermined constants, possibly functions of the transform parameter α. This solution can be obtained using standard techniques from the theory of linear differential equations. Its validity can easily be verified by substitution into the differential equations (A.14) and (A.15). The constants A and B must be determined from the boundary conditions.

The condition that the shear stress $\sigma_{xy} = 0$ for $y = 0$ leads to the relation

$$B = A, \tag{A.18}$$

so that the solution can now be written as

$$U = A(1 + m\alpha y)\exp(\alpha y), \tag{A.19}$$

$$V = A(1 + m - m\alpha y)\exp(\alpha y). \tag{A.20}$$

The last remaining constant A must be determined from the boundary condition for the normal stresses. The Fourier transform of the normal stress σ_{yy} is defined by

$$\sigma_{yy} = \int_0^\infty S_{yy}\cos(\alpha x)\,d\alpha. \tag{A.21}$$

Using the expression (A.6) it is found that

$$\frac{S_{yy}}{\mu} = 2mA\alpha(1 + \alpha y)\exp(\alpha y). \tag{A.22}$$

It is assumed that the boundary condition for the normal stresses is

$$y = 0 \quad : \quad \sigma_{yy} = q(x). \tag{A.23}$$

In terms of the Fourier transform this boundary condition is

$$y = 0 \quad : \quad S_{yy} = \frac{2}{\pi}\int_0^\infty q(x)\cos(\alpha x)\,dx. \tag{A.24}$$

It follows from (A.22) and (A.24) that

$$A = \frac{1}{m\pi\mu}\,\frac{1}{\alpha}\int_0^\infty q(x)\cos(\alpha x)\,dx. \tag{A.25}$$

This completes the solution. The only constant in the problem appears to be the Fourier transform of the loading function, except for a multiplication factor.

The displacements are, with (A.8), (A.9), (A.19) and (A.20),

$$u = \int_0^\infty A\,(1 + m\alpha y)\exp(\alpha y)\sin(\alpha x)\,d\alpha, \tag{A.26}$$

$$v = \int_0^\infty A\,(1 + m - m\alpha y)\exp(\alpha y)\cos(\alpha x)\,d\alpha. \tag{A.27}$$

It now follows that

$$e = \frac{\partial u}{\partial x} + \frac{\partial v}{\partial y} = 2\int_0^\infty A\alpha\exp(\alpha y)\cos(\alpha x)\,d\alpha, \tag{A.28}$$

Furthermore

$$f = \frac{\partial u}{\partial x} - \frac{\partial v}{\partial y} = 2my\int_0^\infty A\alpha^2\exp(\alpha y)\cos(\alpha x)\,d\alpha, \tag{A.29}$$

and

$$g = \frac{\partial u}{\partial y} + \frac{\partial v}{\partial x} = 2my\int_0^\infty A\alpha^2\exp(\alpha y)\sin(\alpha x)\,d\alpha. \tag{A.30}$$

The stresses can easily be expressed into these three quantities,

$$\sigma_{xx} = m\mu e + \mu f, \tag{A.31}$$

$$\sigma_{yy} = m\mu e - \mu f, \tag{A.32}$$

$$\sigma_{xy} = \mu g. \tag{A.33}$$

Because at the surface $y = 0$ the function f vanishes, it follows that at this surface $\sigma_{xx} = \sigma_{yy}$. This is a well known property of the Boussinesq problem.

Of particular interest is the displacement of the surface $y = 0$. With (A.27) it is found that

$$v_0 = (1 + m) \int_0^\infty A \cos(\alpha x)\, d\alpha. \tag{A.34}$$

The mathematical problem now remaining is the evaluation of the integral in (A.25), and then the evaluation of the integral in (A.34). In many cases, the first integral can be calculated, but the second one does not converge. This is a well known result, which is a consequence from the fact that the displacements due to a loading which has a non-zero resultant force has a logarithmic singularity. If the resultant force of the load is zero, however, the integrals may be evaluated, depending upon the mathematical complexity of the functions, of course. Otherwise, when the integral (A.34) does not converge, it may well be possible to determine its derivatives, which are needed to evaluate the stresses.

A.4 Example

As an example we will consider the function

$$q(x) = pa^2 \frac{a^2 - x^2}{(a^2 + x^2)^2}. \tag{A.35}$$

It may be noted that the total load on the surface due to this stress distribution is zero, because its integral is zero,

$$\int_0^\infty q(x)\, dx = 0. \tag{A.36}$$

In this case the integral in (A.25) can indeed be evaluated in a relatively simple way, so that

$$A = \frac{pa^2}{2m\mu} \exp(-\alpha a). \tag{A.37}$$

This means that the surface displacement is

$$v_0 = \frac{pa^2(1 + m)}{2m\mu} \int_0^\infty \exp(-\alpha a) \cos(\alpha x)\, d\alpha. \tag{A.38}$$

This integral is easy to evaluate. The result is

$$v_0 = \frac{pa(1 + m)}{2m\mu} \frac{a^2}{a^2 + x^2}. \tag{A.39}$$

B. SOME FOURIER TRANSFORMS

In this appendix some Fourier transforms are assembled, mainly from the literature. These integrals are used in the paper or in other appendices.

A well known Laplace transform (Churchill, 1972), which can easily be derived by using partial differentiation, is

$$\int_0^\infty \cos(at)\exp(-st)\,dt = \frac{s}{s^2+a^2}. \tag{B.1}$$

By a simple change of notation this integral can also be written as a Fourier cosine transform,

$$\int_0^\infty \exp(-\alpha h)\cos(\alpha x)\,d\alpha = \frac{h}{h^2+x^2}. \tag{B.2}$$

Using the Fourier inversion theorem (Sneddon, 1951), it now follows that

$$\frac{2}{\pi}\int_0^\infty \frac{h}{h^2+x^2}\cos(\alpha x)\,dx = \exp(-\alpha h), \tag{B.3}$$

or

$$\int_0^\infty \frac{1}{h^2+x^2}\cos(\alpha x)\,dx = \frac{\pi}{2h}\exp(-\alpha h). \tag{B.4}$$

Differentiation of (B.4) with respect to h gives, after division by $-2h$,

$$\int_0^\infty \frac{1}{(h^2+x^2)^2}\cos(\alpha x)\,dx = \frac{\pi}{4h^3}(1+\alpha h)\exp(-\alpha h). \tag{B.5}$$

Because $h^2 - x^2 = 2h^2 - (h^2+x^2)$ it follows from (B.4) and (B.5) that

$$\int_0^\infty \frac{h^2-x^2}{(h^2+x^2)^2}\cos(\alpha x)\,dx = \frac{\pi\alpha}{2}\exp(-\alpha h). \tag{B.6}$$

Differentiation of (B.5) with respect to h gives, after division by $-4h$,

$$\int_0^\infty \frac{1}{(h^2+x^2)^3}\cos(\alpha x)\,dx = \frac{\pi}{16h^5}[3+3\alpha h+(\alpha h)^2]\exp(-\alpha h). \tag{B.7}$$

Because $h^2 - 3x^2 = 4h^2 - 3(h^2+x^2)$ it follows from (B.5) and (B.7) that

$$\int_0^\infty \frac{h^2-3x^2}{(h^2+x^2)^3}\cos(\alpha x)\,dx = \frac{\pi\alpha^2}{4h}\exp(-\alpha h). \tag{B.8}$$

Differentiation of (B.7) with respect to h gives, after division by $-6h$,

$$\int_0^\infty \frac{1}{(h^2+x^2)^4}\cos(\alpha x)\,dx = \\ = \frac{\pi}{96h^7}[15+15(\alpha h)+6(\alpha h)^2+(\alpha h)^3]\exp(-\alpha h). \tag{B.9}$$

Because $h^4 - 6x^2h^2 + x^4 = 8h^4 - 8h^2(h^2+x^2) + (h^2+x^2)^2$ it follows from (B.5), (B.7) and (B.9) that

$$\int_0^\infty \frac{h^4-6x^2h^2+x^4}{(h^2+x^2)^4}\cos(\alpha x)\,dx = \frac{\pi\alpha^3}{12}\exp(-\alpha h). \tag{B.10}$$

Now returning to the second integral, eq. (B.2), it follows, by differentiation with respect to h, that

$$\int_0^\infty \alpha \cos(\alpha x) \exp(-\alpha h)\, d\alpha = \frac{h^2 - x^2}{(h^2 + x^2)^2}. \tag{B.11}$$

Differentiating this equation once more with respect to h gives

$$\int_0^\infty \alpha^2 \cos(\alpha x) \exp(-\alpha h)\, d\alpha = \frac{2h(h^2 - 3x^2)}{(h^2 + x^2)^3}. \tag{B.12}$$

Differentiating equation (B.12 with respect to h gives

$$\int_0^\infty \alpha^3 \cos(\alpha x) \exp(-\alpha h)\, d\alpha = \frac{6(h^4 - 6h^2x^2 + x^4)}{(h^2 + x^2)^4}. \tag{B.13}$$

It may be noted that (B.11), (B.12) and (B.13) are the inverse Fourier transforms of (B.6), (B.8) and (B.10). Differentiating equation (B.13) once more with respect to h gives

$$\int_0^\infty \alpha^4 \cos(\alpha x) \exp(-\alpha h)\, d\alpha = \frac{24h(h^4 - 10h^2x^2 + 5x^4)}{(h^2 + x^2)^5}. \tag{B.14}$$

Integration of eq. (B.2) with respect to h gives

$$\int_0^\infty \frac{1}{\alpha} \exp(-\alpha h) \cos(\alpha x)\, d\alpha = -\log \sqrt{x^2 + h^2}. \tag{B.15}$$

It should be noted that this integral is determined up to an arbitrary integration constant. This constant remains undetermined, because the singularity in the integral cannot be removed. For that reason the integral is given by Bateman (1954), formula (1.4.2), in the form

$$\int_0^\infty \frac{1}{\alpha}[\exp(-\alpha h) - \exp(-\alpha b] \cos(\alpha x)\, d\alpha = \tfrac{1}{2} \log \frac{x^2 + b^2}{x^2 + h^2}. \tag{B.16}$$

Another well known Laplace transform is

$$\int_0^\infty \sin(at) \exp(-st)\, dt = \frac{a}{s^2 + a^2}. \tag{B.17}$$

Written in the notation of a Fourier sine transform this integral is

$$\int_0^\infty \sin(\alpha x) \exp(-\alpha h)\, d\alpha = \frac{x}{h^2 + x^2}. \tag{B.18}$$

Integration with respect to h gives

$$\int_0^\infty \frac{1}{\alpha} \exp(-\alpha h) \sin(\alpha x)\, d\alpha = \arctan(\frac{x}{h}). \tag{B.19}$$

The integration constant has been taken such that in the limiting case $x \to 0$ both sides of the equation tend towards zero. The integral (B.19) can be found in Bateman (1954), formula (2.4.2).

Differentiation of eq. (B.18) with respect to h gives

$$\int_0^\infty \alpha \sin(\alpha x) \exp(-\alpha h)\, d\alpha = \frac{2hx}{(h^2 + x^2)^2}. \tag{B.20}$$

Repeating the differentiation with respect to h gives

$$\int_0^\infty \alpha^2 \sin(\alpha x) \exp(-\alpha h)\, d\alpha = \frac{2x(3h^2 - x^2)}{(h^2 + x^2)^3}. \tag{B.21}$$

Another differentiation with respect to h gives

$$\int_0^\infty \alpha^3 \sin(\alpha x) \exp(-\alpha h)\, d\alpha = \frac{24xh(h^2 - x^2)}{(h^2 + x^2)^4}. \tag{B.22}$$

Differentiating this once more with respect to h gives

$$\int_0^\infty \alpha^4 \sin(\alpha x) \exp(-\alpha h)\, d\alpha = \frac{24x(5h^4 - 10h^2x^2 + x^4)}{(h^2 + x^2)^5}. \tag{B.23}$$

This completes the derivation of the Fourier integrals needed in the paper.

C. FILON's method for Fourier integrals

A method for the numerical evaluation of Fourier type integrals, i.e. integrals involving the product of some given function with a factor $\sin(kx)$ or $\cos(kx)$, has been developed by Filon (1928). This method is presented below, using complex variable notations.

C.1 Basic principles

In many fields of applied mathematics it is sometimes convenient to represent a (complex) function $f(x)$ by its Fourier series expansion (Sneddon, 1951; Korn & Korn, 1968)

$$f(x) = \sum_{k=-\infty}^{\infty} B_k \exp(ikx), \tag{C.1}$$

where the coefficients B_k can be calculated from the integrals

$$B_k = \frac{1}{2\pi} \int_0^{2\pi} f(x) \exp(-ikx)\, dx. \tag{C.2}$$

The integrals in the expression (C.2) can sometimes be calculated analytically, but often it is required to determine them by using an approximate numerical method. The integrals are then considered as the sum of a large number (n) of integrals over a small interval, by writing

$$B_k = \sum_{j=0}^{n-1} J_{kj}, \tag{C.3}$$

where

$$J_{kj} = \frac{1}{2\pi} \int_a^{a+2h} f(x) \exp(-ikx)\, dx, \tag{C.4}$$

and where $a = 2\pi j/n$ and $h = \pi/n$. Direct numerical evaluation of integrals of the type (C.4) is often inaccurate, because of the oscillating character of the integrand, which results in an approximation in which many positive and negative contributions must be added to obtain the final result. Errors may then accumulate so that the final result is not very accurate, especially for large values of k.

Following the success of Simpson's method for the numerical evaluation of integrals of non-periodic functions, Filon proposed to write, in an arbitrary interval $a < x < a + 2h$,

$$f(x) = \frac{1}{2h^2} (t_1 - 2t_2 + t_3), \tag{C.5}$$

where

$$t_1 = (a + 2h - x)(a + h - x) f(a), \tag{C.6}$$

$$t_2 = (a + 2h - x)(a - x) f(a + h), \tag{C.7}$$

$$t_3 = (a + h - x)(a - x) f(a + 2h). \tag{C.8}$$

These formulas express that the function $f(x)$ is approximated by a continuous quadratic form passing through the values at the points $x = a$, $x = a + h$ and $x = a + 2h$. The function $\exp(-ikx)$ in the integrand is not approximated.

After substitution of (C.5) into (C.4), and evaluation of the various integrals one obtains

$$\begin{aligned} J_{kj} = \frac{\exp(-ika)}{4\pi h^2 k^3} \big\{ & [c_1 + c_2 \exp(-2ikh)] f(a) \\ & + [c_3 + c_4 \exp(-2ikh)] f(a + h) + [c_5 + c_6 \exp(-2ikh)] f(a + 2h) \big\}, \end{aligned} \tag{C.9}$$

where

$$c_1 = -2ik^2h^2 + 3kh + 2i, \tag{C.10}$$

$$c_2 = kh - 2i, \tag{C.11}$$

$$c_3 = -4kh - 4i, \tag{C.12}$$

$$c_4 = -4kh + 4i, \tag{C.13}$$

$$c_5 = kh + 2i, \tag{C.14}$$

$$c_6 = 2ik^2h^2 + 3kh - 2i. \tag{C.15}$$

This completes the calculation of the integral.

The procedure fails for $k = 0$, but in that case the classical Simpson's formula may be used,

$$J_{0j} = \frac{1}{2\pi} \int_a^{a+2h} f(x)\, dx = \frac{h}{6\pi} [f(a) + 4f(a+h) + f(a+2h)]. \tag{C.16}$$

It can be shown that the general formula (C.9) reduces to (C.16) for $k \to 0$.

The formulas given in this section can easily be incorporated into a computer program. An example of the application of such a program is given below. It may be noted that a more accurate approximation may be obtained if the function $f(x)$ is approximated by a polynomial of higher order than 2, say a polynomial of fourth order (Verruijt, 1969). The additional accuracy obtained in this way is usually not necessary, however, as the approximation presented above is usually sufficiently accurate.

C.2 Example

As an example the function $f(x) = \exp(x/4)$ is considered, on the interval from $x = 0$ to $x = 2\pi$. For this case the integrals (C.2) can easily be calculated, with the result

$$B_k = \frac{2}{\pi} \frac{1 + 4ik}{1 + 16k^2} [\exp(\frac{\pi}{2} - 1)], \tag{C.17}$$

which is valid for positive and negative values of k. The numerical results for the first 20 positive terms are shown in table 1, as calculated using a subdivision of the interval into 200 parts. The analytical

k	$\mathrm{Re}(B_k)$	$\mathrm{Im}(B_k)$
0	2.425825	0.000000
1	0.142696	0.570782
2	0.037320	0.298563
3	0.016730	0.200758
4	0.009439	0.151024
5	0.006049	0.120989
6	0.004204	0.100901
7	0.003090	0.086526
8	0.002367	0.075733
9	0.001870	0.067332
10	0.001515	0.060608
11	0.001252	0.055104
12	0.001052	0.050516
13	0.000897	0.046633
14	0.000773	0.043304
15	0.000674	0.040419
16	0.000592	0.037894
17	0.000525	0.035666
18	0.000468	0.033686
19	0.000420	0.031913
20	0.000379	0.030318

Table C.1. 20 Coefficients

results are exactly equal to these results, at least up to the 6 decimals shown in the table.

C.3 Accuracy of the Fourier approximation

The accuracy of the numerical calculation of the Fourier coefficients does not mean that the Fourier series is an accurate approximation of the original function. To illustrate this point it is recalled that the integrals (C.2) are the coefficients of the Fourier series expansion (C.1)

$$f(x) = \sum_{k=-\infty}^{\infty} B_k \exp(ikx). \tag{C.18}$$

The sum of the series, using the numerical calculation of the first 20 coefficients, is shown in figure C.1, together with the original function $f(x) = \exp(x/4)$. It appears that the approximation with 20 terms is reasonably good, except near the two ends. This is due to the fact that the function to be approximated is not periodic itself, and the Fourier series approximation is always periodic. These deviations will always occur, even for very large values of n. For periodic functions the approximation is generally much better, and then the series usually converges much faster. One may also say that the Fourier series approximation is not really suitable for non-periodic functions.

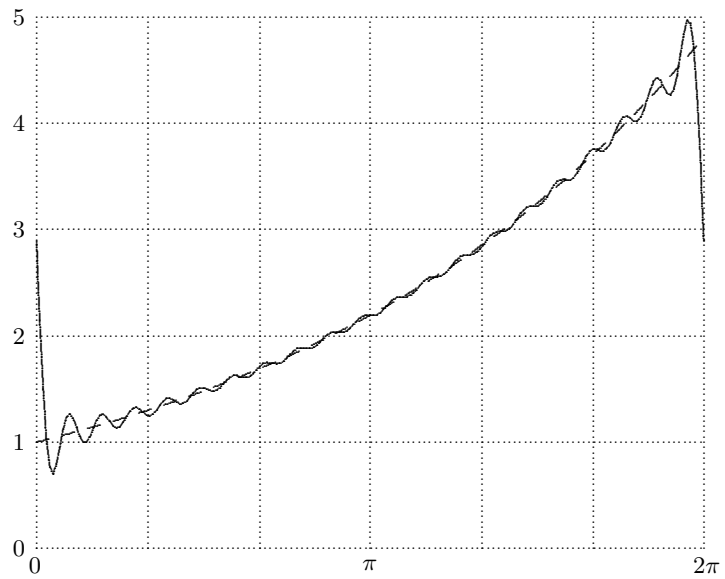

Figure C.1. Fourier series approximation, $n = 20$

References

H. Bateman, *Tables of Integral Transforms*, 2 vols., McGraw-Hill, New York, 1954.

C.J. Callias and X. Markenscoff, Singular asymptotics analysis for the singularity at a hole near a boundary, *Q. Appl. Math.* **47**, 233-245, 1989.

E.G. Coker and L.N.G. Filon, *Photoelasticity*, University Press, Cambridge, 1931.

H. Duddeck, Empfehlungen zur Berechnung von Tunneln im Lockergestein, *Die Bautechnik* **10**, 349-356, 1980.

L.N.G. Filon, On a quadrature formula for trigonometric integrals, *Proc. Roy. Soc. Edinburgh*, **45**, 356-366, 1966.

H.G. Georgiadis, A.P. Rigatos and N.C. Charalambakis, Dynamic stress concentration around a hole in a viscoelastic plate, *Acta Mechanica* **111**, 1-12, 1995.

A.E. Green and W. Zerna, *Theoretical Elasticity*, Clarendon Press, Oxford, 1954.

W. Gröbner and N. Hofreiter, *Integraltafel*, Springer, Wien, 1961.

G.B. Jeffery, Plane stress and plane strain in bipolar coordinates, *Trans. Royal Soc.*, series A, **221**, 265-293, 1920.

G. Kirsch, *VDI* **42**, 1898.

W.T. Koiter, An elementary solution of two stress concentration problems in the neighbourhood of a hole, *Quart. Appl. Math.* **15**, 303-308, 1957.

G.A. Korn and T.M. Korn, *Mathematical Handbook for Scientists and Engineers*, 2nd ed., McGraw-Hill, New York, 1968.

E. Melan, Der Spannungszustand der durch eine Einzelkraft im Innern beanspruchten Halbscheibe, *ZAMM*, **12**, 343-346, 1932.

R.D. Mindlin, Stress distribution around a tunnel, *Trans. ASCE*, 1117-1153, 1940.

R.D. Mindlin, Stress distribution around a hole near the edge of a plate under tension, *Proc. Soc. Experimental Stress Anal.* **5**, 56-67, 1948.

N.I. Muskhelishvili, *Some Basic Problems of the Mathematical Theory of Elasticity*, translated from the Russian by J.R.M. Radok, Noordhoff, Groningen, 1953.

R.K.N.D. Rajapakse and D. Gross, Transient response of an orthotropic elastic medium with a cavity, *Wave Motion* **21**, 231-252, 1995.

C. Sagaseta, Analysis of undrained deformation due to ground loss, *Géotechnique* **37**, 301-320, 1987.

I.N. Sneddon, *Fourier Transforms*, McGraw-Hill, New York, 1951.

I.S. Sokolnikoff, *Mathematical Theory of Elasticity*, 2nd ed., McGraw-Hill, New York, 1956.

S.P. Timoshenko and J.N. Goodier, *Theory of Elasticity*, 2nd ed., McGraw-Hill, New York, 1951.

A.O. Uriel and C. Sagaseta, General report: Selection of design parameters for underground construction, *Proc. 12th Int. Conf. Soil Mech. and Found. Eng.* **4**, Rio de Janeiro, 2521-2551, 1989.

A. Verruijt, *Stresses due to Gravity in an Elastic Half-plane with Notches or Mounds*, Ph.D. Thesis Delft, Van Soest, Amsterdam, 1969.

A. Verruijt, A complex variable solution for a deforming circular tunnel in an elastic half-plane, *Int. J. Numer. Anal. Methods Geomech.* **21**, 77-89, 1997.

A. Verruijt, Deformations of an elastic half plane with a circular cavity, *Int. J. Solids Structures* **35**, 2795-2804, 1998.

A. Verruijt and J.R. Booker, Surface settlements due to ground loss and ovalisation of a tunnel, *Géotechnique*, **46**, 753-756, 1996.

A. Verruijt and J.R. Booker, Complex variable analysis of Mindlin's tunnel problem, *Developments in Theoretical Geomechanics*, (D.W. Smith and J.P. Carter, editors), Balkema, Rotterdam, 3-22, 2000.

L.Z. Wu and S.Y. Du, The elastic field in a half-space with a circular cylindrical inclusion, *J. Appl. Mech.* **63**, 925-932, 1996.